UF(II) SYSTEM Products Guide Ver.2_E

UF(II) Narrow System

UF(II) Regular System

UF(II) Wide System

UF(II) Internal Non Submerged System

DIO IMPLANT

UF(II) Implant System

Works best with

(computer guided surgery system)

Find out more here

www.dionavi.com

DIO IMPLANT

DIO UF(II) System Products Guide Ver.2_E

Make your life more abundant, Make your tomorrow more happier

DIO is leading the digital dentistry with various digital solutions and original implant products.

UF(II) Narrow System
UF(II) Regular System
UF(II) Wide System
UF(II) Internal Non Submerged System

Simple & Powerful

UFII HSA Full Line-up

Hybrid SLA

UF(II) Narrow
UF(II) Regular
UF(II) Wide

Surface Feature

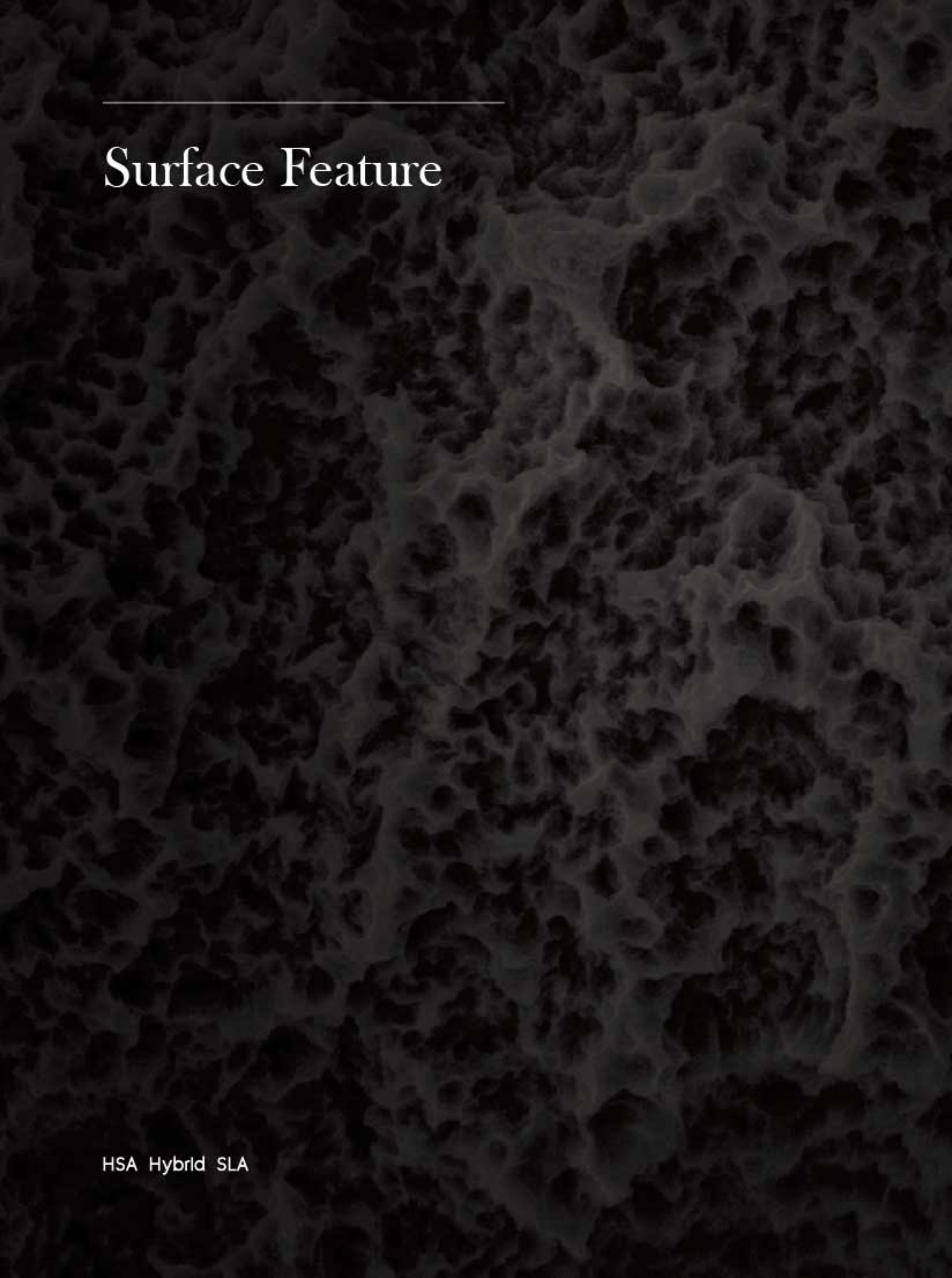

HSA Hybrid SLA

HSA Hybrid SLA

Apply the optimal morphology and roughness for better osseointegration

Upper / Micro Surface

Ra : 0.5~1.0㎛ Minimize Peri-Implantitis

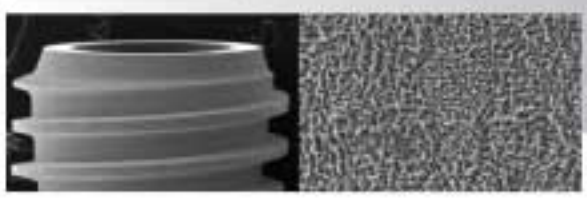

- Lower roughness on upper part reduces the chance of getting peri-implantitis.
- Less friction around cortical bone promotes less bone loss.

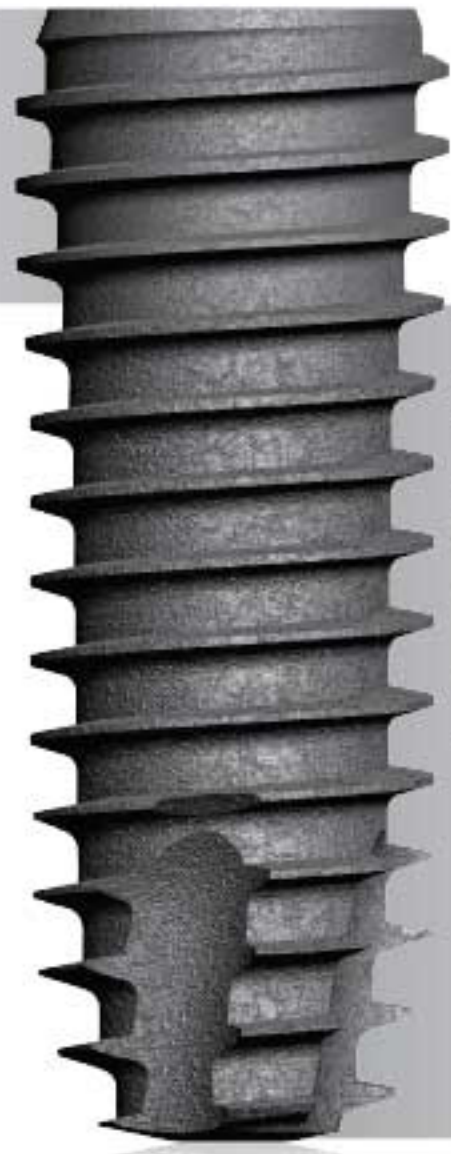

Body / Macro+Micro Surface

Ra : 2.0~2.5㎛ Stimulate Osseointegration

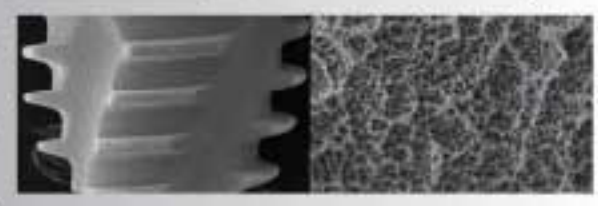

- with ideal Ra.2.0~2.5㎛ promotes not only rapid osseointegration but also long-term statibility.

Advanced Surface Modification Techniques for Enhancing Osseointegration of Titanium Implant

Department of dental materials, School of Dentistry, Chonnam University. Ho-jun Song, PhD

Titanium oxide lm is typically consist of TiO, TiO3, TiO2. The most stable form is TiO2.

Size of 1~10㎛, micro scale of roughness stimulates attachment and separation of osteoblast and accelerates building of extracellular matrix(ECM) and mineralization which helps to create faster osseointegration reaction.

Rough surfaces increase coherence between surface of implant and mineralized bone. Hansson S et al. theoretically approached and has reported that depth of 1.5㎛, 3~5㎛ in diameter hemisphere pit is ideal for perfect roughness.

1) Abron A, Hopfensperger M, Thompson J, Cooper LF. Evaluation of a predictive model for implant surface topography effects on early osseointegration in the rat tibia model. J Prosthet Dent 2001;85:40-6.

2) Hansson S, Norton M. The relation between surface roughness and interfacial shear strength for bone-anchored implant.A mathematical model. Journal of Biomechanics 1999;32(8):829-836.

Digital Implant System

Narrow

Diameter : Ø3.0 / Ø3.3
Length : 8.5 / 10 / 11.5 / 13 / 15
Ø3.0 Fixture : Exclusive use of anterior tooth
Implant Surface : HSA

1.7 Hex

Upper Thread

Taper thread, Initial Fixation

- Taper thread on straight body disperse the stress of upper part of implant.
- The depth of the thread getting lower toward the top improves blood supply and lessens the empty space in cortical bone to reduce the time to create new bone.

Straight Body

Decreasing bone damage

- Decreasing bone damage
- Body part gets longer for long size implant which allows stable implantation without sharp change

Apical Design

Gradually 15° tapered guide

- With under drilling in weak bone, initial insertion goes well as apex has 15° tapered design.

Morse Tapered Connection 11°

The Fixture & abutment interface ensures hermetic sealing.
This distributes the load to the fixture evenly.
Therefore, it minimizes bone loss.

Open thread

Fixture placement with minimum resistance.
Possible to place deeper without drilling.

Cutting edge

Maximize the efficiency of self-tapping with a sharp edge.

Narrow Flow Chart

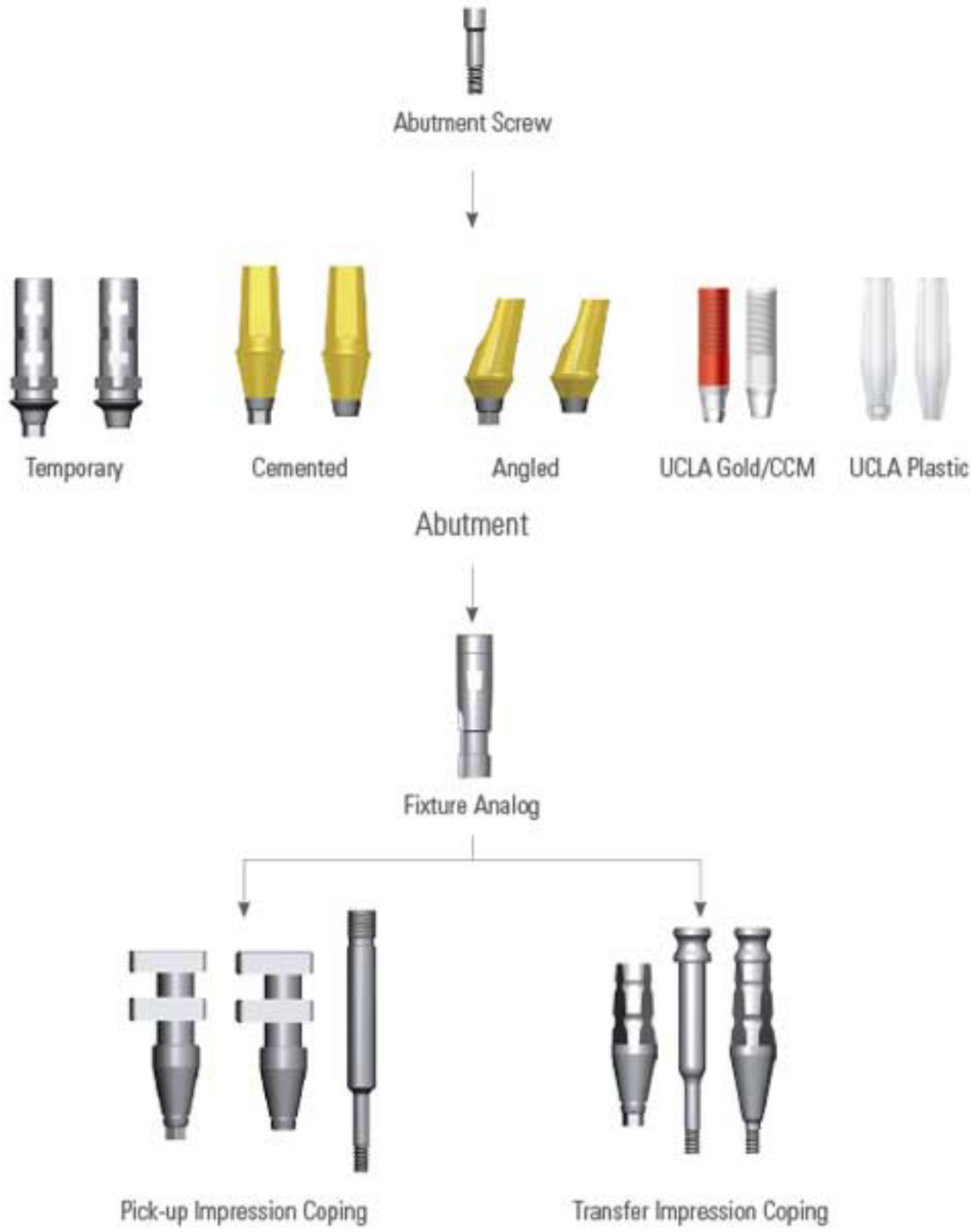

Cement-Retained Restorations

Temporary / Cemented / Angled Abutment

Single Bridge
Plastic Coping

Solid Abutment Analog

Impression Cap

Protect Cap

Solid Abutment

Stainless Steel Housing

OT Cap

Ball Abutment Analog

Ball Abutment

Cement-Retained Restorations

Solid Abutment

Overdentures

Ball Abutment

UF(II)Narrow Fixture

Cover Screw

Healing Abutment

Narrow Fixture

Hex	Length	Ø3.0	Ø3.3
1.7	8.5	UF(II)N 3008S	UF(II)N 3308S
	10	UF(II)N 3010S	UF(II)N 3310S
	11.5	UF(II)N 3011S	UF(II)N 3311S
	13	UF(II)N 3013S	UF(II)N 3313S
	15	UF(II)N 3015S	UF(II)N 3315S
Apex		Ø1.6	Ø1.9

· Ø3.0 Fixture : Exclusive use of anterior tooth
· HSA (Hybrid SLA)
· Packing Unit : Fixture + Cover Screw

Healing Abutment

Cuff	Height	Ø4.1	Ø4.2	Ø4.6	Ø4.7
2	0	UNSHA 4020		UNSHA 4520	
2	4		UNSHA 4024		UNSHA 4524
3	5.5		UNSHA 4035		UNSHA 4535
4	7		UNSHA 4047		UNSHA 4547
5	8.5		UNSHA 4058		UNSHA 4558
6	10		UNSHA 4060		UNSHA 4560

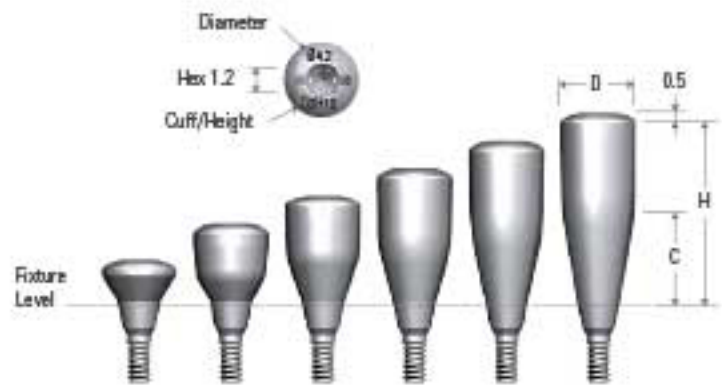

· Use 1.2 Hex / 0.5 Slot Driver
· Tightening torque : 5 ~ 8Ncm

Cover Screw

Cuff	0	1	2	3
Code	UNSCS 2700	UNSCS 2710	UNSCS 2720	UNSCS 2730

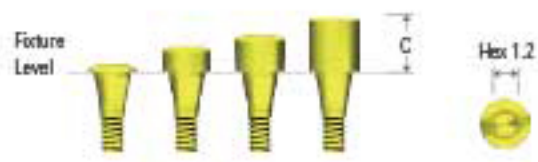

· Use 1.2 Hex Driver
· Tightening torque : 5 ~ 8Ncm

Temporary Abutment

Cuff	Ø4.0	
	Hex (Guide Pin)	Non-Hex
1	UNSTA 4010H	UNSTA 4010N
3	UNSTA 4030H	UNSTA 4030N

· Packing unit : Abutment + Abutment Screw (UNSAS 1407H)
· Tightening torque : 20Ncm

Cemented Abutment

Cuff	Ø4.0			
	Hex		Non-Hex	
	L 5.5	L 7	L 5.5	L 7
1	UNSCA 40105H	UNSCA 40107H	UNSCA 40105N	UNSCA 40107N
2	UNSCA 40205H	UNSCA 40207H	UNSCA 40205N	UNSCA 40207N
3	UNSCA 40305H	UNSCA 40307H	UNSCA 40305N	UNSCA 40307N
4	UNSCA 40405H	UNSCA 40407H	UNSCA 40405N	UNSCA 40407N
5	UNSCA 40505H	UNSCA 40507H	UNSCA 40505N	UNSCA 40507N
6	UNSCA 40605H	UNSCA 40607H	UNSCA 40605N	UNSCA 40607N
7	UNSCA 40705H	UNSCA 40707H	UNSCA 40705N	UNSCA 40707N

· Packing unit : Abutment + Abutment Screw (UNSAS 1407H)
· Tightening torque : 20Ncm

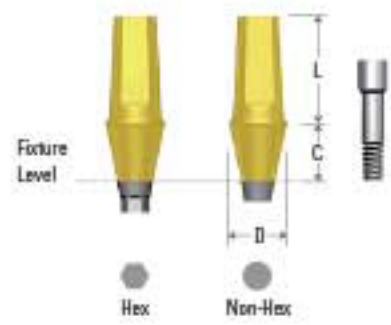

Angled Abutment

Cuff	Ø4.0	
	Hex B	Non-Hex
2	UNSAA 402015BH	UNSAA 402015N
4	UNSAA 404015BH	UNSAA 404015N

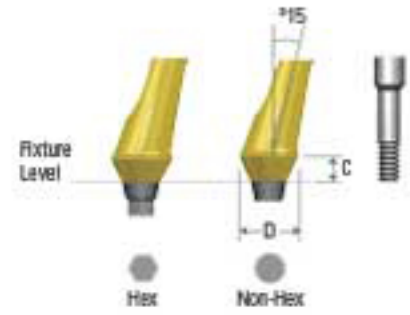

· Packing unit : Abutment + Abutment Screw (UNSAS 1407H)
· Tightening torque : 20Ncm

CCM Type

Cuff	Ø4.0	
	Hex	Non Hex
1	UNSCCA 4010H	UNSCCA 4010N
3	UNSCCA 4030H	UNSCCA 4030N

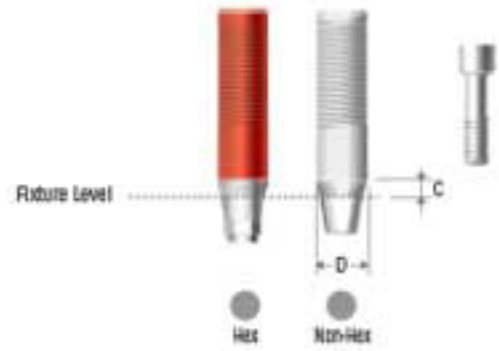

After the customization, it is casted with dental alloy
(Gold / non-precious metal alloy) to make prosthesis.
· Depending on the connecting method with fixture, it is categorized as Hex / Non – Hex
· Use 1.2 Hex Driver
· Packing Unit : Abutment + Abutment Screw (SSC2008H)
· Tightening torque : 20Ncm

Transfer Impression Coping

Cuff	Length	Ø4.0	
		Hex (Guide Pin)	Non-Hex
2	13	UNSTI 4013H (UNSTI 4013S)	UNSTI 4013N
4	15	UNSTI 4015H (UNSTI 4015S)	UNSTI 4015N
6	17	UNSTI 4017H (UNSTI 4017S)	UNSTI 4017N

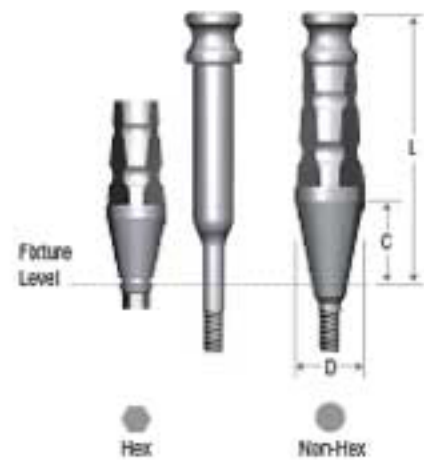

· Packing unit : Transfer Impression Coping + Guide Pin

Pick Up Impression Coping

Cuff	Length	Ø4.0	
		Hex (Guide Pin)	Non-Hex
2	12	UNSPI 4012H (UNSSG 1422)	UNSPI 4012N (UNSSG 1422)
4	14	UNSPI 4014H (UNSSG 1422)	UNSPI 4014N (UNSSG 1422)
6	16	UNSPI 4016H (UNSSG 1425)	UNSPI 4016N (UNSSG 1425)

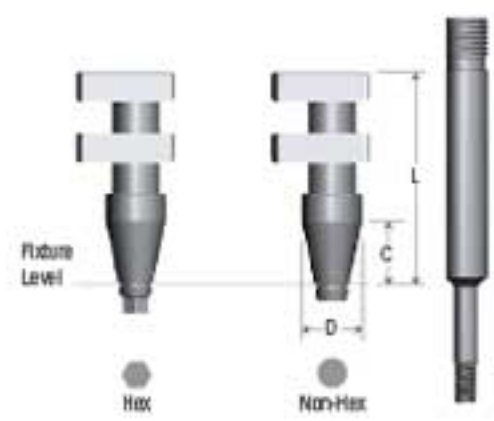

· Packing unit : Impression Coping + Guide Pin

Fixture Analog

Length	Ø3.0
12	UNSFA 3012

Solid Abutment

Cuff	Ø4.0	
	L 5.5	L 7
1	UNSSA 40105	UNSSA 40107
2	UNSSA 40205	UNSSA 40207
3	UNSSA 40305	UNSSA 40307
4	UNSSA 40405	UNSSA 40407
5	UNSSA 40505	UNSSA 40507
6	UNSSA 40605	UNSSA 40607
7	UNSSA 40705	UNSSA 40707
Protect Cap	UNSAC 4005	UNSAC 4007

· Packing unit : Abutment + Protect Cap
· Tightening torque : 20Ncm

Plastic Coping

Length	Ø4.0
10	UNSAP 4010S Single (Red)
	UNSAP 4010B Bridge(White)

Solid Abutment Analog

Length	Ø4.0
5.5	UNSSAA 4005
7	UNSSAA 4007

Impression Cap

Length	Ø4.0
11	UNSAI 4011

Ball Abutment

Length	Ø3.5
1	UNSBA 3510
2	UNSBA 3520
3	UNSBA 3530
4	UNSBA 3540
5	UNSBA 3550
6	UNSBA 3560
7	UNSBA 3570

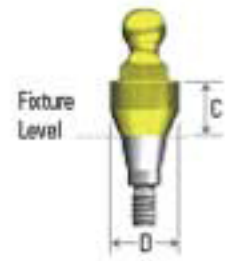

· Packing unit : Ball Abutment + Abutment Holder
· Tightening torque : 20Ncm

Ball Abutment Analog

Length	Ø4.0
10	UNSBAA 3510

OT Cap

Length	Ø4.2
2.6	049PCNDR8

· Packing unit : 6 pieces

Stainless Steel Housing

Length	Ø4.6
3	041CAN

· Packing unit : 2 pieces

Regular

Diameter : Ø3.8 / Ø4.0 / Ø4.5 / Ø5.0 / Ø5.5
Length : 7 / 8.5 / 10 / 11.5 / 13
Implant Surface : HSA

2.5 Hex

Upper Thread

Taper thread, Initial Fixation

- Taper thread on straight body disperse the stress of upper part of implant.
- The depth of the thread getting lower toward the top improves blood supply and lessens the empty space in cortical bone to reduce the time to create new bone.

Straight Body

Decreasing bone damage

- Decreasing bone damage
- Body part gets longer for long size implant which allows stable implantation without sharp change

Apical Design

Gradually 15° tapered guide

- With under drilling in weak bone, initial insertion goes well as apex has 15° tapered design.

Morse Tapered Connection 11°

- The Fixture & Abutment interface ensures hermetic sealing and enables distributing the load to the fixture evenly.
- Minimizes bone loss.

Open thread

Fixture placement with minimum resistance.
Possible to place deeper without drilling.

Cutting edge

Maximize the efficiency of self-tapping with a sharp edge.

IMPLANT UF(II) SYSTEM

Wide

Diameter : Ø6.0 / Ø6.5 / Ø7.0
Length : 7 / 8.5 / 10 / 11.5
Implant Surface : HSA

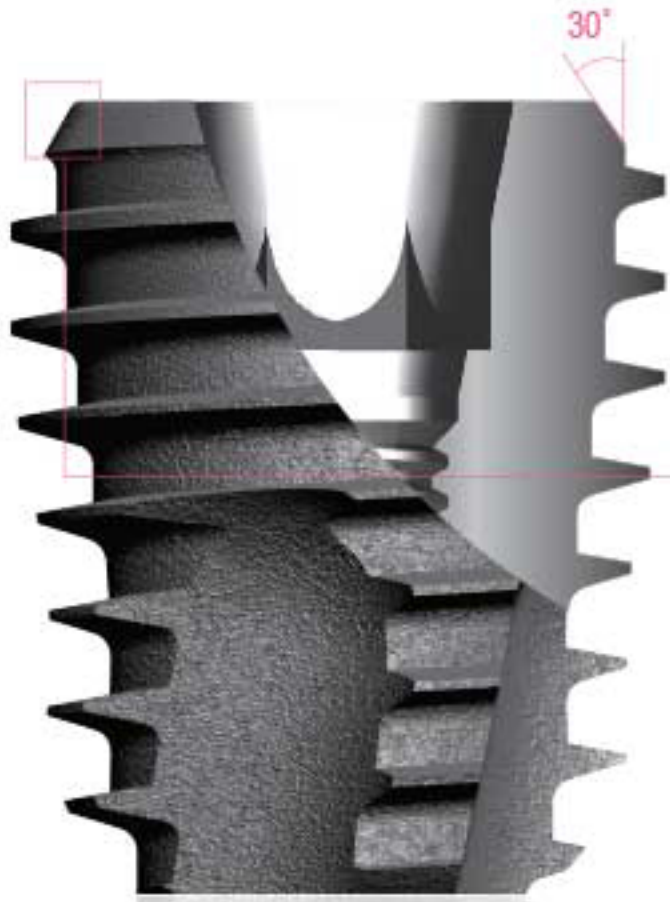

Platform Switching Design

Open thread

Fixture placement with minimum resistance. Possible to place deeper without drilling.

Body thread

UF(II) Body Thread design

Conical Seal Connection

Taper 11° Hex 2.5
Abutments are compatible with UF(II) Regular system

Cutting edge

Maximize the efficiency of self-tapping with a sharp edge.

Regular / Wide Flow Chart

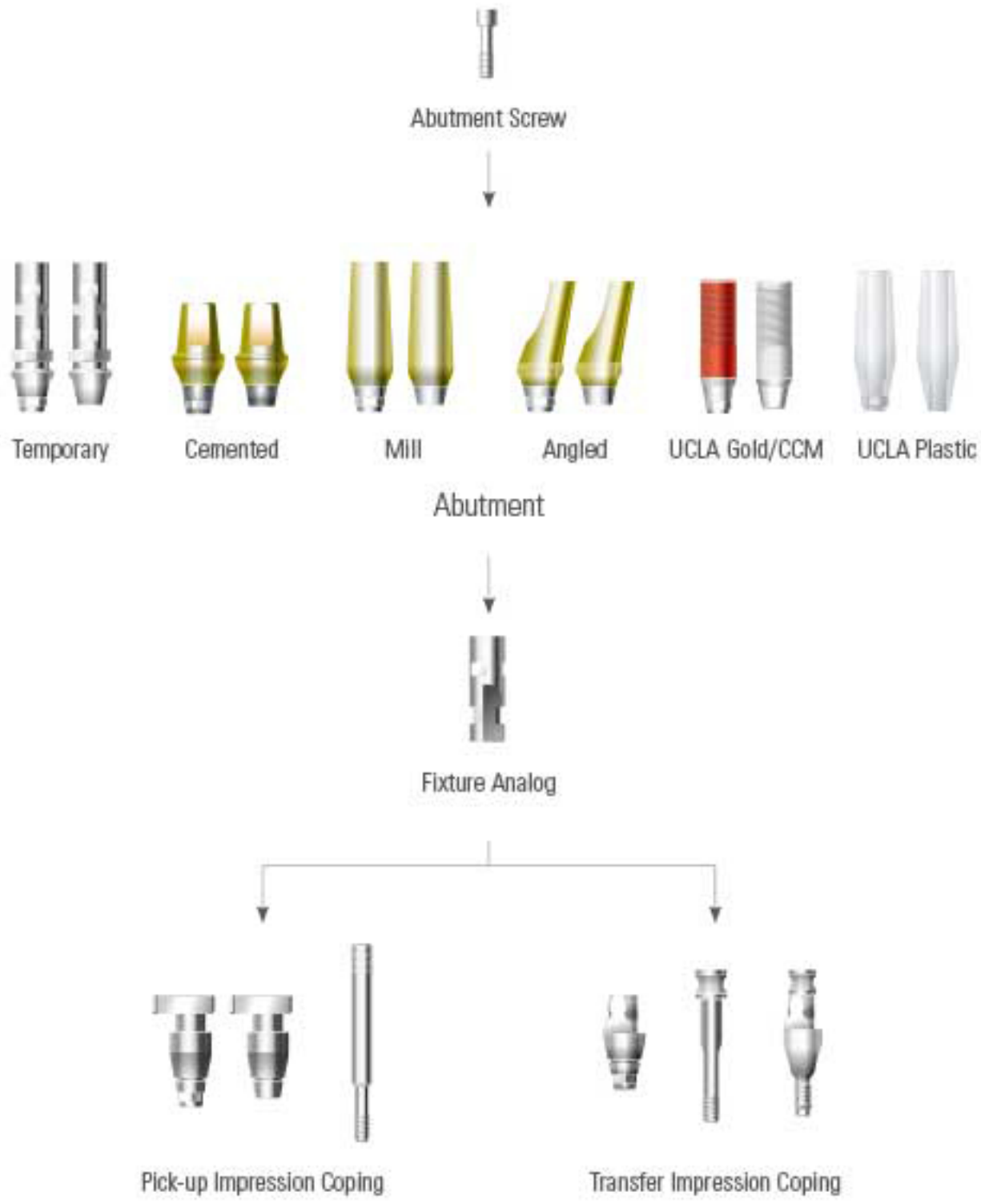

Cement-Retained Restorations

Temporary / Cemented / Mill / Angled Abutment

Screw-Retained Restorations

UCLA Gold / UCLA Plastic Abutment

Regular / Wide Flow Chart

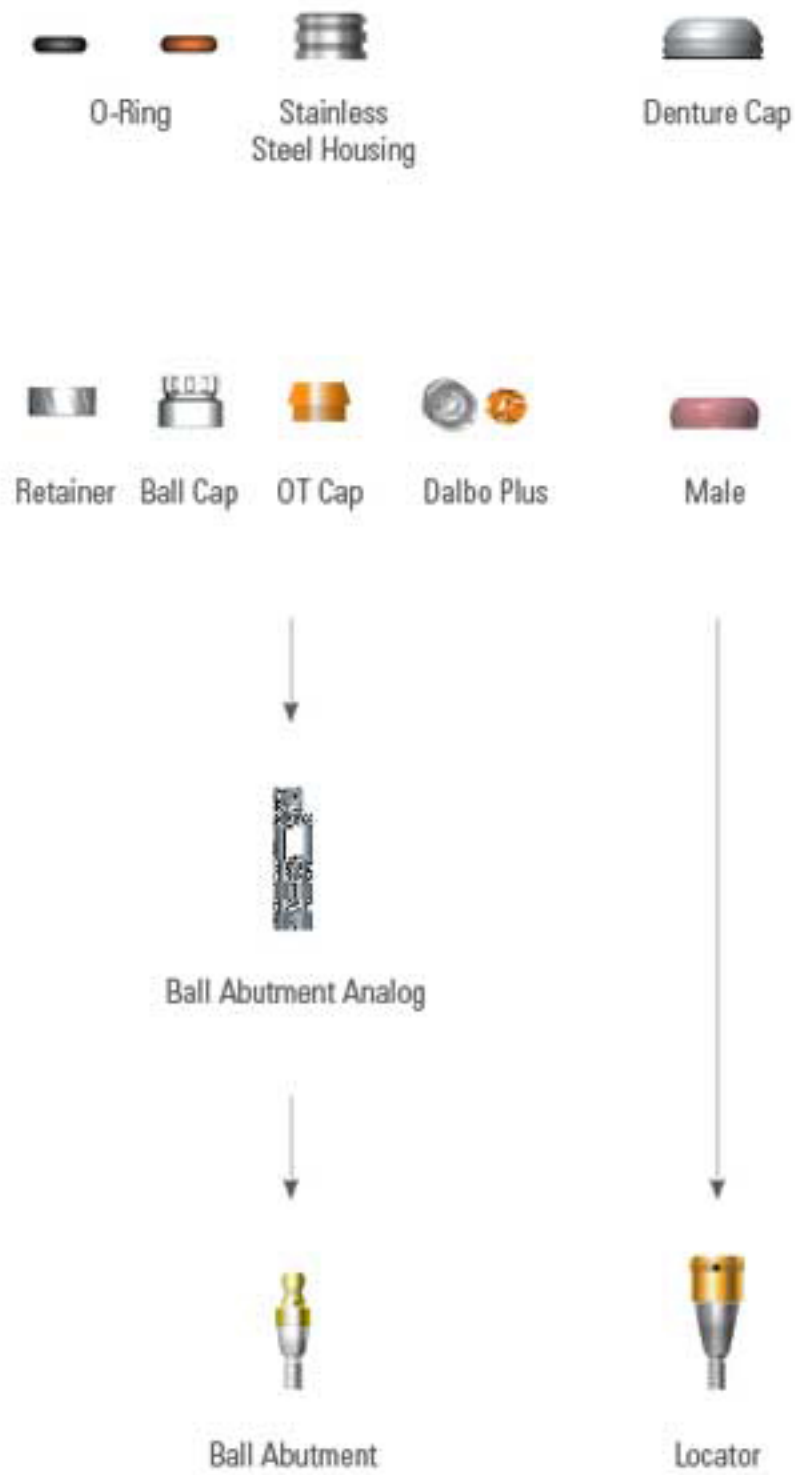

Cement-Retained Restorations
Solid Abutment

Overdentures
Ball Abutment / Locator

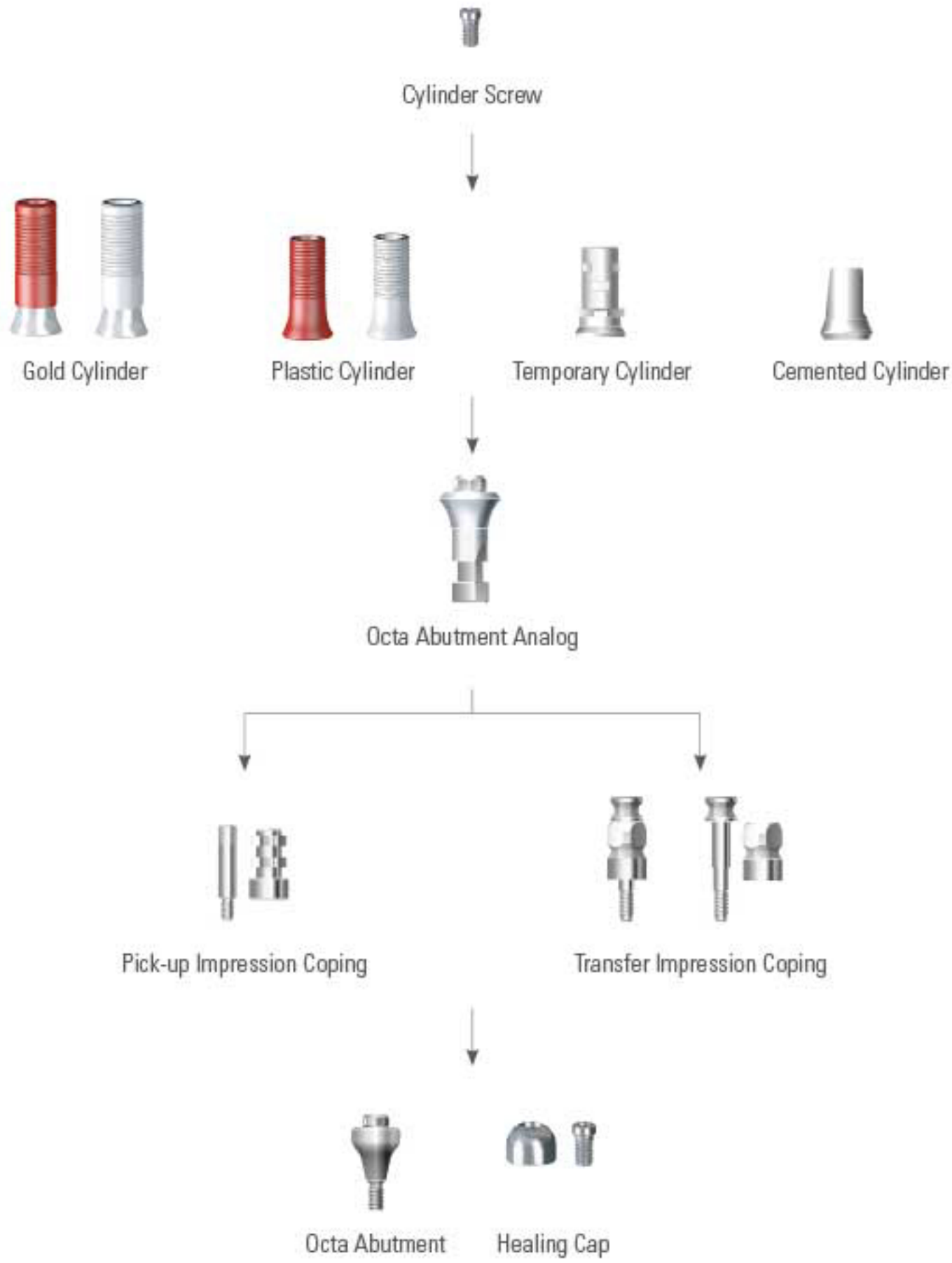

Screw-Retained Restorations

Octa Abutment

Regular Fixture

HSA

Hex	Length	Ø3.8	Ø4.0	Ø4.5	Ø5.0	Ø5.5
2.5	7	-	-	UF(II) 4507S	UF(II) 5007S	UF(II) 5507S
	8.5	UF(II) 3808S	UF(II) 4008S	UF(II) 4508S	UF(II) 5008S	UF(II) 5508S
	10	UF(II) 3810S	UF(II) 4010S	UF(II) 4510S	UF(II) 5010S	UF(II) 5510S
	11.5	UF(II) 3811S	UF(II) 4011S	UF(II) 4511S	UF(II) 5011S	UF(II) 5511S
	13	UF(II) 3813S	UF(II) 4013S	UF(II) 4513S	UF(II) 5013S	UF(II) 5513S
Apex		Ø2.1	Ø2.2	Ø2.6	Ø3.1	Ø3.7

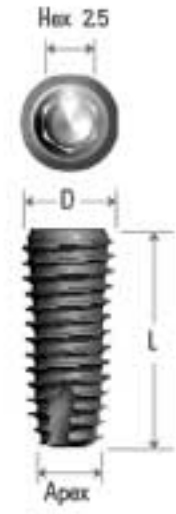

Wide Fixture

HSA

Hex	Length	Ø6.0	Ø6.5	Ø7.0
	7	UF(II) 6007S	UF(II) 6507S	UF(II) 7007S
	8.5	UF(II) 6008S	UF(II) 6508S	UF(II) 7008S
	10	UF(II) 6010S	UF(II) 6510S	UF(II) 7010S
	11.5	UF(II) 6011S	UF(II) 6511S	UF(II) 7011S
Apex		Ø5.4	Ø5.9	Ø6.4

Cover Screw

Cover Screw

Cuff	Code
0	SSCS 3400
1	SSCS 3410
2	SSCS 3420
3	SSCS 3430

- Use 1.2 Hex Driver
- Used for narrow area after the Implant surgery or to protect Implant connection area.
- Screw installation after removing the remaining blood or foreign substance around the implant fixture.
- 1.2 Hex Driver (5 ~ 8Ncm)
- When cold-welding occurs between screw and implant, it is possible to use 0.5 slot driver instead.

Temporary Abutment

Temporary Abutment

Cuff	Ø4.5	
	Hex	Non Hex
1	SSTA 4510H	SSTA 4510N
3	SSTA 4530H	SSTA 4530N

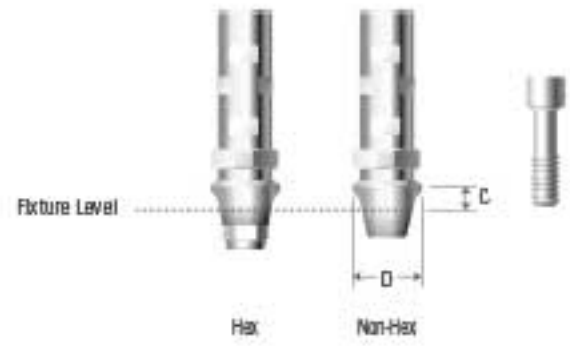

- Used when temporary prosthesis is made
- Hex Type / Non-Hex Type
- 1.2 Hex driver
- Packing Unit : Abutment + Abutment Screw (SSC 2008H)
- Torque : 30 ~ 35Ncm

Healing Abutment

Cuff	Ø4.0
2	SSHA 4020
4	SSHA 4040
6	SSHA 4060
8	SSHA 4080

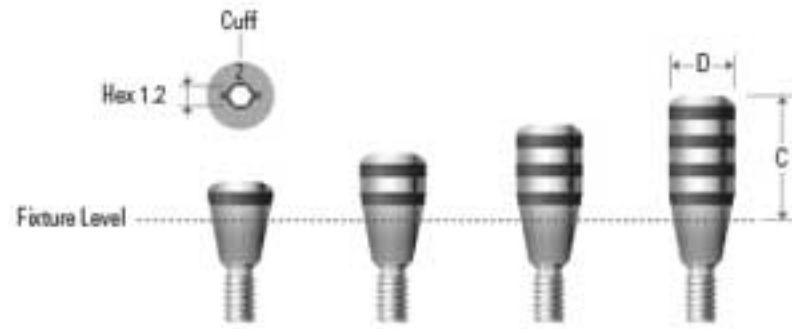

· Use 1.2 Hex Driver
· Torque : 5 – 8Ncm

Cuff	Height	Ø4.5	Ø5.5	Ø6.5	Ø7.5
2	0	SSHA 4520	SSHA 5520	SSHA 6520	SSHA 7520
2	4	SSHA 4524	SSHA 5524	SSHA 6524	SSHA 7524
3	5.5	SSHA 4535	SSHA 5535	SSHA 6535	SSHA 7535
4	7	SSHA 4547	SSHA 5547	SSHA 6547	SSHA 7547

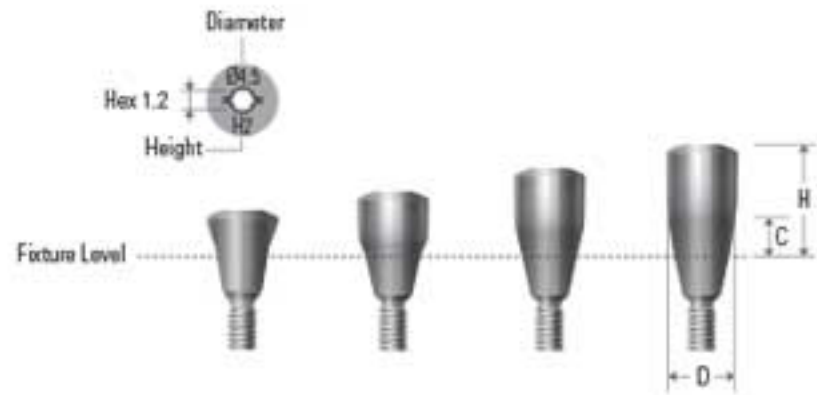

Cuff	Height	Ø8.2	Ø9.2
1	2	SSHA 8212	SSHA 9212
2	3	SSHA 8223	SSHA 9223
3	4	SSHA 8234	SSHA 9234
4	5	SSHA 8245	SSHA 9245

· Use 1.2 Hex Driver
· Used for making designated shape of gingiva
- Connecting with 1.2 Hex Driver (5 – 8Ncm)
- Choose a healing abutment bigger than final abutment to make it easier to connect final abutment.

Cemented Abutment

Hex Type

Cuff Length		Ø4.5	Ø5.5	Ø6.5	Ø7.5
1	4	SSCA 45104H(II)	SSCA 55104H(II)	SSCA 65104H(II)	SSCA 75104H(II)
2		SSCA 45204H(II)	SSCA 55204H(II)	SSCA 65204H(II)	SSCA 75204H(II)
3		SSCA 45304H(II)	SSCA 55304H(II)	SSCA 65304H(II)	SSCA 75304H(II)
4		SSCA 45404H(II)	SSCA 55404H(II)	SSCA 65404H(II)	SSCA 75404H(II)
5		SSCA 45504H(II)	SSCA 55504H(II)	SSCA 65504H(II)	SSCA 75504H(II)
1	5.5	SSCA 45105H(II)	SSCA 55105H(II)	SSCA 65105H(II)	SSCA 75105H(II)
2		SSCA 45205H(II)	SSCA 55205H(II)	SSCA 65205H(II)	SSCA 75205H(II)
3		SSCA 45305H(II)	SSCA 55305H(II)	SSCA 65305H(II)	SSCA 75305H(II)
4		SSCA 45405H(II)	SSCA 55405H(II)	SSCA 65405H(II)	SSCA 75405H(II)
5		SSCA 45505H(II)	SSCA 55505H(II)	SSCA 65505H(II)	SSCA 75505H(II)
1	7	SSCA 45107H(II)	SSCA 55107H(II)	SSCA 65107H(II)	SSCA 75107H(II)
2		SSCA 45207H(II)	SSCA 55207H(II)	SSCA 65207H(II)	SSCA 75207H(II)
3		SSCA 45307H(II)	SSCA 55307H(II)	SSCA 65307H(II)	SSCA 75307H(II)
4		SSCA 45407H(II)	SSCA 55407H(II)	SSCA 65407H(II)	SSCA 75407H(II)
5		SSCA 45507H(II)	SSCA 55507H(II)	SSCA 65507H(II)	SSCA 75507H(II)
Screw		SSC 2008SH	SSC 2008H	SSC 2008H	SSC 2008H

⊠ Ø4.5 Abutment (SSC 2008SH)

Non-Hex Type

Cuff Length		Ø4.5	Ø5.5	Ø6.5	Ø7.5
1	4	SSCA 45104N(II)	SSCA 55104N(II)	SSCA 65104N(II)	SSCA 75104N(II)
2		SSCA 45204N(II)	SSCA 55204N(II)	SSCA 65204N(II)	SSCA 75204N(II)
3		SSCA 45304N(II)	SSCA 55304N(II)	SSCA 65304N(II)	SSCA 75304N(II)
4		SSCA 45404N(II)	SSCA 55404N(II)	SSCA 65404N(II)	SSCA 75404N(II)
5		SSCA 45504N(II)	SSCA 55504N(II)	SSCA 65504N(II)	SSCA 75504N(II)
1	5.5	SSCA 45105N(II)	SSCA 55105N(II)	SSCA 65105N(II)	SSCA 75105N(II)
2		SSCA 45205N(II)	SSCA 55205N(II)	SSCA 65205N(II)	SSCA 75205N(II)
3		SSCA 45305N(II)	SSCA 55305N(II)	SSCA 65305N(II)	SSCA 75305N(II)
4		SSCA 45405N(II)	SSCA 55405N(II)	SSCA 65405N(II)	SSCA 75405N(II)
5		SSCA 45505N(II)	SSCA 55505N(II)	SSCA 65505N(II)	SSCA 75505N(II)
1	7	SSCA 45107N(II)	SSCA 55107N(II)	SSCA 65107N(II)	SSCA 75107N(II)
2		SSCA 45207N(II)	SSCA 55207N(II)	SSCA 65207N(II)	SSCA 75207N(II)
3		SSCA 45307N(II)	SSCA 55307N(II)	SSCA 65307N(II)	SSCA 75307N(II)
4		SSCA 45407N(II)	SSCA 55407N(II)	SSCA 65407N(II)	SSCA 75407N(II)
5		SSCA 45507N(II)	SSCA 55507N(II)	SSCA 65507N(II)	SSCA 75507N(II)
Screw		SSC 2008SH	SSC 2008H	SSC 2008H	SSC 2008H

- For ordinary cement type prosthesis
- Gold Colored gingival area for esthetic purpose
- Hex / Non-Hex type
- To prevent prosthesis from rotating, it has flat section
- Packing Unit : Abutment + Abutment Screw (SSC 2008H) ⊠ Ø4.5 Abutment (SSC 2008SH)
- Compatible with Solid Abutment Impression Cap(page 29)
- 1.2 Hex driver
- Torque : 30 ~ 35Ncm

Mill Abutment

Hex Type

Cuff	Ø4.0	Ø4.5	Ø5.5	Ø6.5	Ø7.5
1.5	SSMA 4015H				
2		SSMA 4520H			
2.5			SSMA 5525H		
3				SSMA 6530H	SSMA 7530H

Non-Hex Type

Cuff	Ø4.0	Ø4.5	Ø5.5	Ø6.5	Ø7.5
4	SSMA 4015N				
2		SSMA 4520N			
2.5			SSMA 5525N		
3				SSMA 6530N	SSMA 7530N

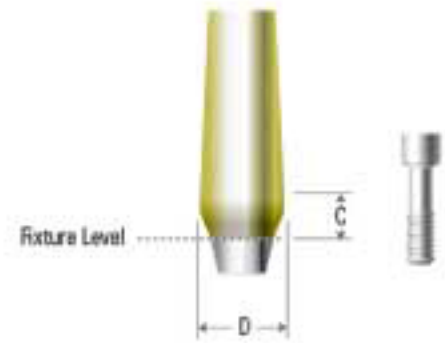

- Used when high customization in abutment path and prosthetic margins are needed.
- Secure tapered connection construction
- Gold colored for aesthetic design
- Use 1.2 Hex Driver
- Packing contents : Abutment + Abutment Screw (SSC2008H)
- Tightening torque : 30 ~ 35Ncm

Angled Abutment

Angled	Type	Ø4.5				
		1.5	2	3	4	5
15°	Hex A	SSAA 451515AH	SSAA 452015AH	SSAA 453015AH	SSAA 454015AH	SSAA 455015AH
	Hex B	SSAA 451515BH	SSAA 452015BH	SSAA 453015BH	SSAA 454015BH	SSAA 455015BH
	Non-Hex	SSAA 451515N	SSAA 452015N	SSAA 453015N	SSAA 454015N	SSAA 455015N
25°	Hex A	SSAA 451525AH	SSAA 452025AH	SSAA 453025AH	SSAA 454025AH	SSAA 455025AH
	Hex B	SSAA 451525BH	SSAA 452025BH	SSAA 453025BH	SSAA 454025BH	SSAA 455025BH
	Non-Hex	SSAA 451525N	SSAA 452025N	SSAA 453025N	SSAA 454025N	SSAA 455025N

Angled	Type	Ø5.5				
		1.5	2	3	4	5
15°	Hex A	SSAA 551515AH	SSAA 552015AH	SSAA 553015AH	SSAA 554015AH	SSAA 555015AH
	Hex B	SSAA 551515BH	SSAA 552015BH	SSAA 553015BH	SSAA 554015BH	SSAA 555015BH
	Non-Hex	SSAA 551515N	SSAA 552015N	SSAA 553015N	SSAA 554015N	SSAA 555015N
25°	Hex A	SSAA 551525AH	SSAA 552025AH	SSAA 553025AH	SSAA 554025AH	SSAA 555025AH
	Hex B	SSAA 551525BH	SSAA 552025BH	SSAA 553025BH	SSAA 554025BH	SSAA 555025BH
	Non-Hex	SSAA 551525N	SSAA 552025N	SSAA 553025N	SSAA 554025N	SSAA 555025N

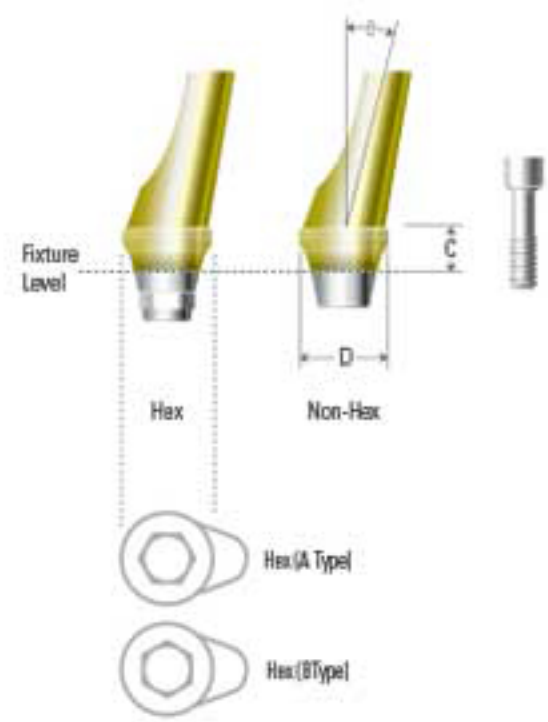

- Used to modify the fixture's path and is mainly used for anterior teeth.
- Depending on the angle slope, it is categorized into 15° and 25° Angled Abutment.
- Availability of A type and B type of hex part overcomes the limitation of direction of the abutment.
- For the esthetics, Gingival area is colored in gold.
- Use 1.2 Hex Driver
- Packing contents : Abutment + Abutment Screw (SSC2008H)
- Tightening torque : 30 ~ 35Ncm

UCLA Abutment

Gold Type

Cuff	Ø4.5	
	Hex	Non Hex
1	SSGA 4510H	SSGA 4510N
3	SSGA 4530H	SSGA 4530N

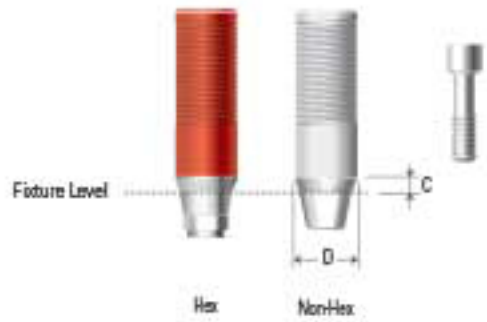

- Used for fabrication of Screw retained restorations which use abutment screw to fix prosthesis.
- Can be used when there is limitation on path, esthetics, space etc.
- Directly casted on abutment to make inner part of prosthesis.
- Customized abutment can be made which can be applied to variety of cases.
- Strong enough for cases requiring difficult angle modification.
- After the customization, dental gold metal will be casted with it to make prosthesis.
- Melting range on cylinder area : 1400 ~ 1450°C
  (Obligation on non-mineral of noble or metal -free alloy casting)
- Depending on the connecting method with fixture, it is categorized as Hex / Non –Hex
- Use 1.2 Hex Driver · Tightening torque : 30 ~ 35Ncm
- Packing contents : Abutment + Abutment Screw (SSC2008H)

CCM Type

Cuff	Ø4.0		Ø4.5	
	Hex	Non Hex	Hex	Non Hex
1	CCSS 4010H	CCSS 4010N	CCSS 4510H	CCSS 4510N
3			CCSS 4530H	CCSS 4530N

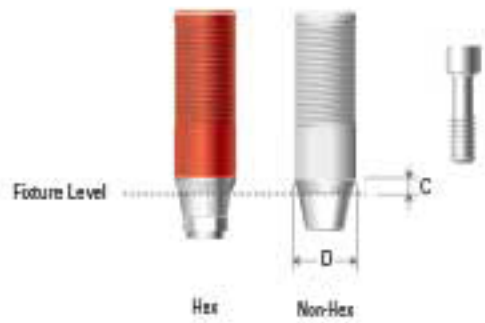

After the customization, it is casted with dental alloy
(Gold / non-precious metal alloy) to make prosthesis.
- Depending on the connecting method with fixture, it is categorized as Hex / Non – Hex
- Use 1.2 Hex Driver
- Packing Unit : Abutment + Abutment Screw (SSC2008H)

Tightening torque : 30 ~ 35Ncm

Plastic Type

Length	Ø4.5		Ø5.5	
	Hex	Non Hex	Hex	Non Hex
12	SSPA 4512H	SSPA 4512N	SSPA 5512H	SSPA 5512N

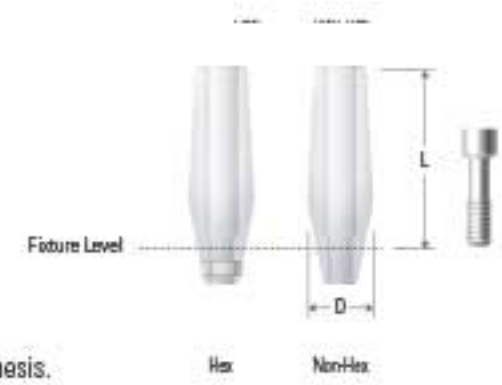

- Similar to the UCLA Gold Abutment but the abutment is completely made of plastic.
- Compared to UCLA Gold Abutment, its degree of precision or accuracy on connection area with abutment is slightly lower.
- After the customization, it is casted with dental alloy (Gold / non-precious metal alloy) to make prosthesis.
- Use 1.2 Hex Driver
- Packing contents : Abutment + Abutment Screw (SSC2008H)
- Tightening torque : Tightening smoothly before casting, 30 ~ 35Ncm after casting

Impression Coping & Fixture Analog

Pick up Impression Coping

Hex Type

Height	Ø4.0	Ø4.5	Ø5.5	Ø6.5	Guide Pin
09	SSPI 4009H	SSPI 4509H	SSPI 5509H	SSPI 6509H	SSG 2021
13	SSPI 4013H	SSPI 4513H	SSPI 5513H	SSPI 6513H	SSG 2026
17	SSPI 4017H	SSPI 4517H	SSPI 5517H	SSPI 6517H	SSG 2329
19	SSPI 4019H	SSPI 4519H	SSPI 5519H	SSPI 6519H	SSG 2329

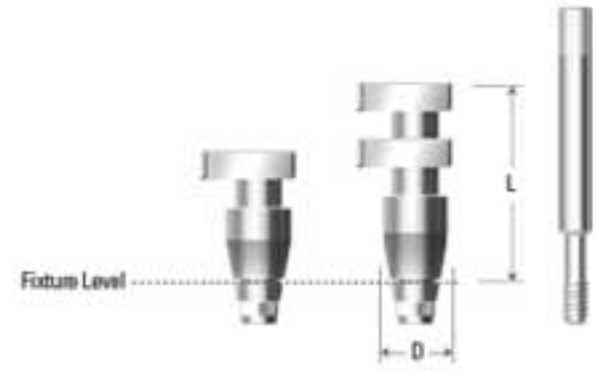

Non-Hex Type

Height	Ø4.0	Ø4.5	Ø5.5	Ø6.5	Guide Pin
09	SSPI 4009N	SSPI 4509N	SSPI 5509N	SSPI 6509N	SSG 2021
13	SSPI 4013N	SSPI 4513N	SSPI 5513N	SSPI 6513N	SSG 2026
17	SSPI 4017N	SSPI 4517N	SSPI 5517N	SSPI 6517N	SSG 2329
19	SSPI 4019N	SSPI 4519N	SSPI 5519N	SSPI 6519N	SSG 2329

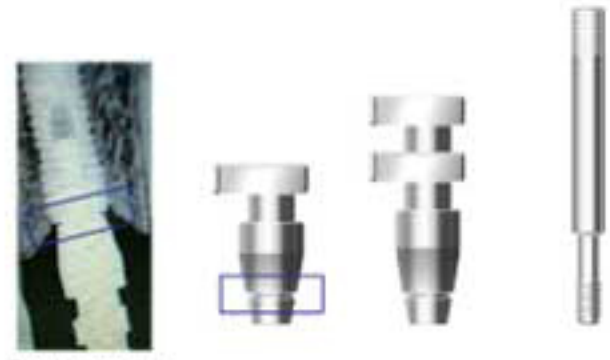

Custom/stock tray is used for pick-up type of impression taking
- Use 1.2 Hex Driver.
- Packing contents : Impression Coping + Guide Pin

Transfer Impression Coping

Hex Type

Height	Ø4.0	Ø4.5	Ø5.5	Ø6.5
10	SSTI 4010H	SSTI 4510H	SSTI 5510H	SSTI 6510H
Guide Pin	SSTI 4015S		SSTI 6515S	
15	SSTI 4015H	SSTI 4515H	SSTI 5515H	SSTI 6515H
Guide Pin	SSTI 4020S		SSTI 6520S	

Non-Hex Type

Height	Ø4.0	Ø4.5	Ø5.5	Ø6.5
10	SSTI 4010N	SSTI 4510N	SSTI 5510N	SSTI 6510N
15	SSTI 4015N	SSTI 4515N	SSTI 5515N	SSTI 6515N

- Stock tray is used for transfer type of impression taking.
- Double sided structure increases quality.
- Hex type is two-piece structure and Non-Hex type is single piece structure.
- Use 1.2 Hex Driver
- Packing contents : Impression Coping + Guide Pin

Fixture Analog

Height	Ø4.0
12	SSFA 4012

- Providing anchor for fabricating implant prosthetics on working model.

Solid Abutment

Cuff	Length	Ø4.5	Ø5.5	Ø6.5	Ø7.5
1	4	SSSA 45104	SSSA 55104	SSSA 65104	SSSA 75104
2		SSSA 45204	SSSA 55204	SSSA 65204	SSSA 75204
3		SSSA 45304	SSSA 55304	SSSA 65304	SSSA 75304
4		SSSA 45404	SSSA 55404	SSSA 65404	SSSA 75404
5		SSSA 45504	SSSA 55504	SSSA 65504	SSSA 75504
1	5.5	SSSA 45105	SSSA 55105	SSSA 65105	SSSA 75105
2		SSSA 45205	SSSA 55205	SSSA 65205	SSSA 75205
3		SSSA 45305	SSSA 55305	SSSA 65305	SSSA 75305
4		SSSA 45405	SSSA 55405	SSSA 65405	SSSA 75405
5		SSSA 45505	SSSA 55505	SSSA 65505	SSSA 75505
1	7	SSSA 45107	SSSA 55107	SSSA 65107	SSSA 75107
2		SSSA 45207	SSSA 55207	SSSA 65207	SSSA 75207
3		SSSA 45307	SSSA 55307	SSSA 65307	SSSA 75307
4		SSSA 45407	SSSA 55407	SSSA 65407	SSSA 75407
5		SSSA 45507	SSSA 55507	SSSA 65507	SSSA 75507

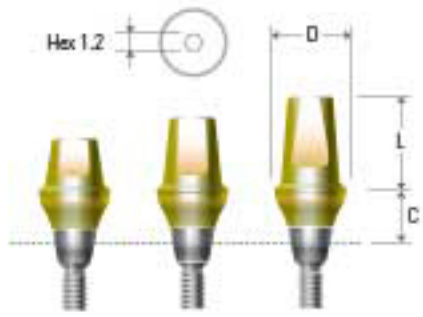

- Cemented type abutment which uses dental cement to fix the prosthesis.
- Abutment and screw are in one-piece structure.
- Taking impression at abutment level.
- Considering the esthetics, gingival part is golden in color.
- Use 1.2 Hex / Solid Abutment Driver
- Packing contents : Abutment + Protect Cap
- Tightening torque : 30 ~ 35Ncm

Protect Cap

Length	Ø4.5	Ø5.5	Ø6.5	Ø7.5
4	SSAC 4504	SSAC 5504	SSAC 6504	SSAC 7504
5.5	SSAC 4505	SSAC 5505	SSAC 6505	SSAC 7505
7	SSAC 4507	SSAC 5507	SSAC 6507	SSAC 7507

- Used to protect solid abutment in the patient's mouth and minimize the discomfort for the patient.
- Can be applied to substructure of temporary prosthesis.
- Convenient locking mechanism.

Impression Cap

Length	Ø4.5	Ø5.5	Ø6.5	Ø7.5
4	SSAI 4511	SSAI 5511	SSAI 6511	SSAI 7511
Guide Pin	○ White	● Red	● Green	● Blue

- Used to take impression of Solid Abutment.
- Different coloring provides easy identification on types of abutment diameter.
- Convenient locking mechanism.

Plastic Coping

Length	Color	Ø4.5	Ø5.5	Ø6.5	Ø7.5
10	Red	SSAP 4510S	SSAP 5510S	SSAP 6510S	SSAP 7510S
	White	SSAP 4510B	SSAP 5510B	SSAP 6510B	SSAP 7510B

- Can be used as prosthesis' frame work by installing Solid Abutment Analog.
- Different coloring provides easy identification on types of case.
- Packing contents : Plastic Coping

Solid Abutment Analog

Length	Ø4.5	Ø5.5	Ø6.5	Ø7.5
4	SSAA 4504	SSAA 5504	SSAA 6504	SSAA 7504
5.5	SSAA 4505	SSAA 5505	SSAA 6505	SSAA 7505
7	SSAA 4507	SSAA 5507	SSAA 6507	SSAA 7507
Color	-	● Red	● Green	● Blue

- As Solid Abutment on working model.
- Different coloring provides easy identification on types of abutment diameter.
- Packing Unit : Solid Abutment Analog

Octa Abutment

Cuff	Ø4.8	Ø6.0	Ø6.5
1.5	SSOA4815	SSOA6015	SSOA 6515
2.5	SSOA4825	SSOA6025	SSOA 6525
3.5	SSOA4835	SSOA6035	SSOA 6535
4.5	SSOA4845	SSOA6045	SSOA 6545
5.5	SSOA4855	SSOA6055	SSOA 6555

Designed to mount prosthesis by turning the internal connection fixture into external connection type with cylinder.
- Used to create screw retained prosthesis on poor path bridge case.
- Use Octa Abutment Driver(HD 3006A / HD 3012A).
- Packing contents : Abutment + Holder
*Holder installation: Convenient to install in patient's mouth.
- Tightening torque : 30 ~ 35Ncm

Healing Cap

Length	Ø5.2	Ø7.0
4	HCI 48504	HCI 65704

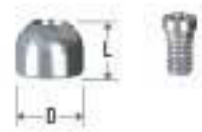

- To protect Octa Abutment in mouth, and minimize the patient discomfort.
- Use 1.2 Hex Driver
- Packing Unit : Healing Cap + Cylinder Screw (STI 2004H)
- Tightening torque : 20Ncm

Gold Cylinder

Length	Type	Ø5.0	Ø6.2	Ø6.5
4	Octa	AGI 48504	AGI 60004	AGI 65704
	Non-Octa	AGI 48504N	AGI 60004N	AGI 65704N

- After the customization, Dental gold metal will be casted on it to make prosthesis.
- Cylinder fusion range : 1400 ~ 1450°C (Non-precious metal alloy are not allowed for casting)
- Use 1.2 Hex Driver
- Packing contents : Gold Cylinder + Cylinder Screw (STI 2004)
-Tightening torque : 20Ncm

Plastic Cylinder

Length	Type	Ø5.0	Ø6.3	Ø7.0
10	Octa	API 48514	API 60714	API 65714
	Non-Octa	API 48514N	API 60714N	API 65714N

- After the customization, Dental alloy (Gold/Non-precious metal alloy) will be casted on it to make prosthesis.
- Less accuracy on connecting part compared to Gold Cylinder.
- Use 1.2 Hex Driver - Tightening torque: 20Ncm
- Packing contents : Plastic Cylinder + Cylinder Screw (STI 2004)

Temporary Cylinder

Length	Type	Ø5.0	Ø6.0
10	Octa	ITC 48010	ITC 60010
	Non-Octa	ITC 48010N	ITC 60010N

- Use 1.2 Hex Driver
- Packing contents : Temporary Cylinder + Cylinder Screw (STI 2004)
- Tightening torque : 20Ncm

Cemented Cylinder

Length	Type	Ø5.0	Ø5.8	Ø6.4	Ø6.9
8	Octa	ICC 48508	ICC 48588		
	Non-Octa	ICC 48508N	ICC 48588N		
9	Octa			ICC 60649	ICC 65309
	Non-Octa			ICC 60649N	ICC 65309N

- Use 1.2 Hex Driver
- Packing contents : Cemented Cylinder + Cylinder Screw (STI 2004H)
- Tightening torque : 20Ncm

Pick-up Impression Coping

Length	Type	Ø5.7	Ø6.4	Ø7.0
10	Octa	IPI 48610	IPI 60710	IPI 65710
	Non-Octa	IPI 48610N	IPI 60710N	IPI 65710N

- Pick-up type impression-taking process using custom tray.
- Asymmetry structure to minimize close interruption
- Use 1.2 Hex Driver
- Packing contents : Impression Coping + Guide Pin

Transfer Impression Coping

Length	Ø5.0	Ø6.1	Ø6.6
10	IOTI 48010	IOTI 60010	IOTI 65010

- Transfer type impression-taking process using ready-made tray
- Double sided structure which elevates the quality
- Use 1.2 Hex Driver
- Packing contents : Impression Coping + Guide Pin

Abutment Analog

Length	Ø4.8	Ø6.0	Ø6.5
10		RCI 60014	
12	RCI 48014		RCI 65014

- Provides anchor point for fabricating Octa Abutment configuration.
- Packing content : Octa Abutment Analog

Ball Abutment

Length	Ø3.5
1	SSBA 3510
2	SSBA 3520
3	SSBA 3530
4	SSBA 3540
5	SSBA 3550
6	SSBA 3560

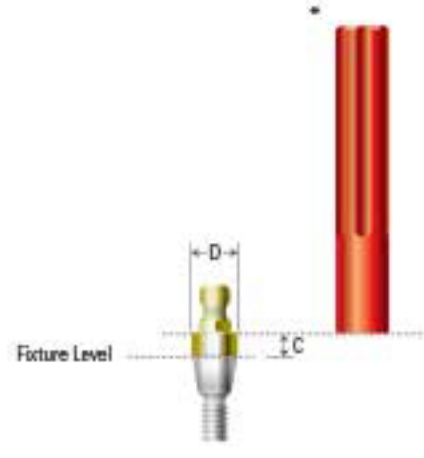

· Used to create over-denture for edentulous patient.
· Used when fixed type prosthesis is difficult due to severe bone or soft tissue loss.
· Post part is colored in gold.
· Path recovery to the maximum of 20°
· Use Ball Abutment Driver (HD 2406A / HD 2412A)
· Packing contents : Abutment + O-Ring (1 Piece) + Holder
*Holder installation : Convenient to install in patient's mouth
· Tightening torque : 30 ~ 35Ncm

Ball Abutment Analog

Length	Ø3.5
10	SABA 3510

· Provides anchor for ball abutment on working model.
· Packing Unit : Analog

Dalbo Plus

Code	DBPM 201

· Double structure with titanium housing and precious metallic insert.
· Provides long term usage about 10,000 trials with its resistance to abrasion.
· Minimum abrasion to the Ball Abutment and to the insert.
· Simple and convenient retention.
· Up to 20° in insertion angle flexibility.
· Compatible with all DIO Implant System.

Ball Cap

Code	BC 5004

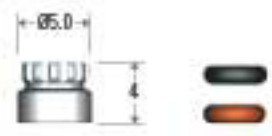

· Outstanding consistency
· Packing Unit : Ball Cap + O-Ring (Black & Orange)

Retainer

Code	RT 0502

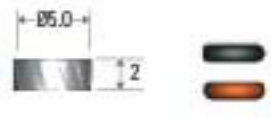

· Advantageous when occlusal distance is low compare to Ball Cap.
· Packing contents : Retainer + O-Ring (2 Piece)

O-Ring

Code	OR 0450 B (Black) / OR 0450 O (Orange)

· Black : used for fabrications with high retention (in dental lab)
· Orange : For clinical use (Over 6Ncm)
· Package Contents : O-Ring (1 Piece)

Stainless Steel Housing

Code	041CAN

- The size of the new stainless steel housing has been reduced to provide stability and it is designed to strengthen the coherence with resin.

OT Cap(Orange)

Code	049PCNDR8

- The OT-Cap is suitable for ball type over denture material because it is made up of polyamide that has excellent elasticity and abrasion resistance.

*Cap replacement is recommended after 12 months of use.

Insertion Tool For Caps

Code	085IAC

- A tool that is used to insert the cap in the stainless housing.
  Possible to use both tip in a normal and micro situation.
- Packing Unit : Handle + Tip

Remover Tool For Caps

Code	091EC

- A tool that is used to remove the cap from the stainless housing
  Possible to use in both normal and micro situation with one tool.

Locator

Narrow

Length	Ø3.0 / 3.3
1	02961
2	02962
3	02963
4	02964
5	02965
6	02966

Regular

Length	Ø3.8 / 4.0 / 4.5 / 5.0 / 5.5
1	02967
2	02968
3	02969
4	02970
5	02971
6	02972

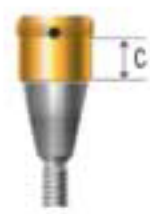

Male

Retention	1.5 lbs	3 lbs	5 lbs
Code	LOC 8529 ● Blue	LOC 8527 ● Pink	LOC 8524 ○ White

Locator Core tool

Code	LOC 8393

IMPLANT UF(II) SYSTEM

Internal Non Submerged

Platform : Ø4.8 / Ø6.0
Diameter : Ø3.6 / Ø4.0 / Ø4.5 / Ø5.0 / Ø5.5
Length : 7 / 8.5 / 10 / 11.5 / 13
Implant Surface : HSA

2.9 Octa

Upper Thread

Taper thread, Initial Fixation

- Taper thread on straight body disperse the stress of upper part of implant.
- The depth of the thread getting lower toward the top improves blood supply and lessens the empty space in cortical bone to reduce the time to create new bone.

Straight Body

Decreasing bone damage

- Decreasing bone damage
- Body part gets longer for long size implant which allows stable implantation without sharp change

Apical Design

12° Taper guide gradually

- With under drilling in weak bone, initial insertion goes well as apex has 12° tapered design.

Cutting edge

Maximize the efficiency of self-tapping with a sharp edge.

Internal Non Submerged Flow Chart

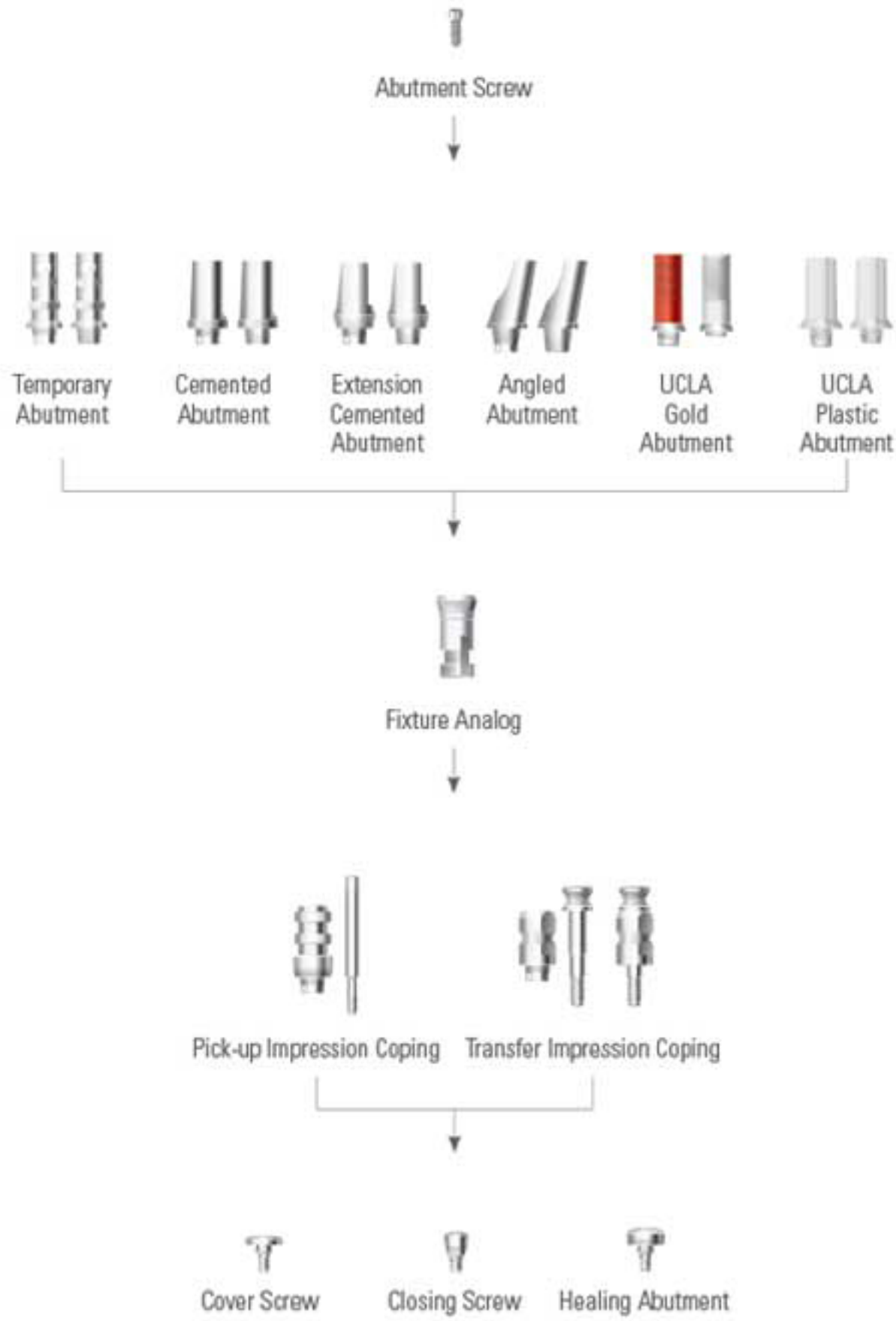

Cement-Retained Restorations

Temporary / Cemented / Extension Cemented / Angled Abutment

Screw-Retained Restorations

UCLA Gold / UCLA Plastic Abutment

UF(II) Internal Non Submerged Fixture

Internal Non Submerged Flow Chart

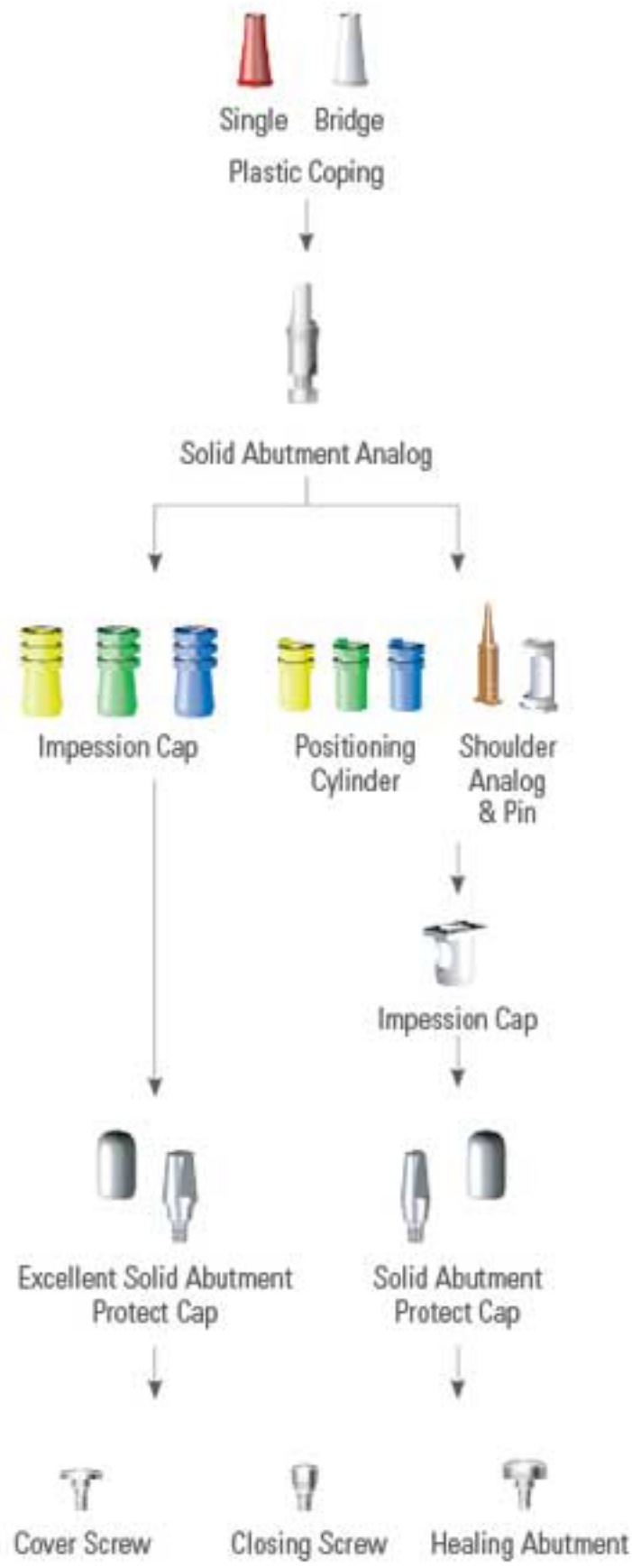

Cement-Retained Restorations
Solid Abutment / Excellent Solid Abutment

UF(II) Internal Fixture

Internal Non Submerged Flow Chart

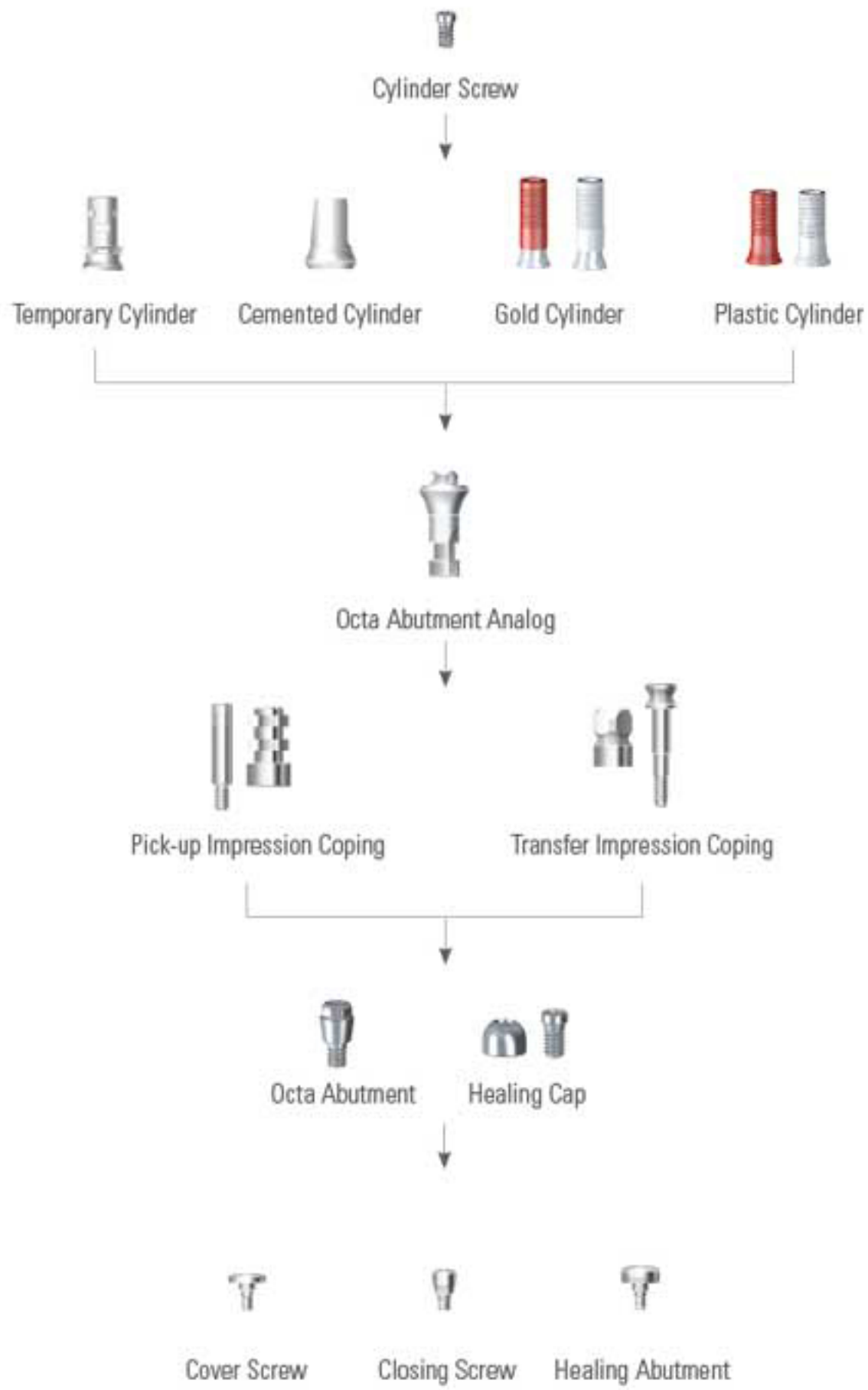

Screw-Retained Restorations

Octa Abutment

UF(II) Internal Fixture

Internal Non Submerged Flow Chart

O-Ring

Retainer

Ball Cap

Ball Abutment Analog

Ball Abutment

Cover Screw

Closing Screw

Healing Abutment

Overdentures
Ball Abutment

UF(II) Internal Fixture

Internal Non Submerged Fixture

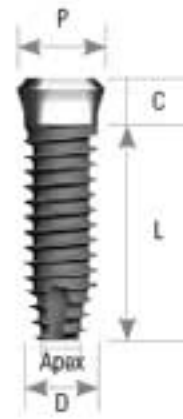

Collor	Length	Platform	Ø4.8			Ø6.0		
		Diameter	Ø3.6	Ø4.0	Ø4.5	Ø4.5	Ø5.0	Ø5.5
1.8	7.0	Code		UF(II)I 401807S	UF(II)I 451807S	UF(II)IW 451807S	UF(II)IW 501807S	UF(II)IW 551807S
	8.5			UF(II)I 401808S	UF(II)I 451808S	UF(II)IW 451808S	UF(II)IW 501808S	UF(II)IW 551808S
	10			UF(II)I 401810S	UF(II)I 451810S	UF(II)IW 451810S	UF(II)IW 501810S	UF(II)IW 551810S
	11.5			UF(II)I 401811S	UF(II)I 451811S	UF(II)IW 451811S	UF(II)IW 501811S	UF(II)IW 551811S
	13			UF(II)I 401813S	UF(II)I 451813S	UF(II)IW 451813S	UF(II)IW 501813S	UF(II)IW 551813S
2.0	7.0		UF(II)I 362007S					
	8.5		UF(II)I 362008S					
	10		UF(II)I 362010S					
	11.5		UF(II)I 362011S					
	13		UF(II)I 362013S					
2.8	7.0			UF(II)I 402807S	UF(II)I 452807S	UF(II)IW 452807S	UF(II)IW 502807S	UF(II)IW 552807S
	8.5			UF(II)I 402808S	UF(II)I 452808S	UF(II)IW 452808S	UF(II)IW 502808S	UF(II)IW 552808S
	10			UF(II)I 402810S	UF(II)I 452810S	UF(II)IW 452810S	UF(II)IW 502810S	UF(II)IW 552810S
	11.5			UF(II)I 402811S	UF(II)I 452811S	UF(II)IW 452811S	UF(II)IW 502811S	UF(II)IW 552811S
	13			UF(II)I 402813S	UF(II)I 452813S	UF(II)IW 452813S	UF(II)IW 502813S	UF(II)IW 552813S

· Packing Unit : Fixture + Cover Screw

Screw

Cover Screw

Platform	Ø4.8	Ø6.0
Diameter	Ø5.5	Ø6.5
Code	AHI 48601H	AHI 60651H

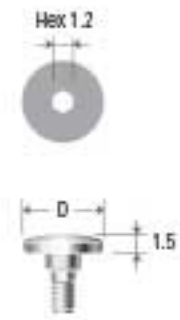

- 1.2 Hex Driver
- Packing Unit : Cover Screw
- Tightening torque : 5 – 8Ncm

Closing Screw

Diameter	Ø3.5
Code	CHI 4800NH

- Use 1.2 Hex / 0.5 Slot Driver
- Tightening torque : 5 – 8Ncm
- Used for narrow area after the surgery or to protect implant connection area.
  Screw installation after removing the remaining blood or foreign substance on the implant.

Healing Abutment

Healing Abutment

Height	Platform	Ø4.8	Ø6.0
	Diameter	Ø5.5	Ø5.5
2	Code	AHI 48602H	AHI 60652H
3		AHI 48603H	AHI 60653H
4		AHI 48604H	AHI 60654H

- 1.2 Hex Driver
- Packing Unit : Healing Abutment
- Tightening torque : 5 – 8Ncm

Temporary Abutment

Temporary Abutment

Length	Platform	Ø4.8		Ø6.0	
	Type	Octa	Non-Octa	Octa	Non-Octa
10	Code	ITA 48010Y	ITA 48010N	ITA 60010Y	ITA 60010N

Octa Non-Octa

- Used for temporary prosthesis
- A projecting part and undercut make higher fixation with acrylic material
- Octa Type / Non-Octa Type
- 1.2 Hex Driver
- Packing Unit : Abutment + Abutment Screw
- Tightening torque : 35Ncm

Cemented Abutment

Cemented Abutment

Cuff	Length	Platform	Ø4.8		Ø6.0	
		Diameter	Ø4.8		Ø5.3	
		Type	Octa	Non-Octa	Octa	Non-Octa
0	4	Code	-	-	AMI 60004Y	AMI 60004N
	5		-	-	AMI 60005Y	AMI 60005N
	7		AMI 48007Y	AMI 48007N	-	-
1	7		AMI 48017Y	AMI 48017N	-	-
2	7		AMI 48027Y	AMI 48027N	-	-
3	7		AMI 48037Y	AMI 48037N	-	-

- Used to make ordinary cement type prosthesis.
- Octa / Non-Octa type
- To prevent rotation of prosthesis it has a section
- Cold Welding is occurred with platform Ø6.0, use removing driver to control
- 1.2 Hex Driver
- Packing Unit : Abutment + Abutment Screw
- Tightening torque : 35Ncm

Extension Cemented Abutment

Cuff	Length	Platform	Ø4.8				Ø6.0	
		Diameter	Ø5.0		Ø5.8		Ø6.0	
		Type	Octa	Non-Octa	Octa	Non-Octa	Octa	Non-Octa
0	7	Code	AEI 48007Y	AEI 48007N	-	-	-	-
1			-	-	AEI 48017Y	AEI 48017N	AEI 60017Y	AEI 60017N
2			-	-	AEI 48027Y	AEI 48027N	-	-
3			-	-	AEI 48037Y	AEI 48037N	AEI 60037Y	AEI 60037N

- Cement-Retained Abutment for modifying path or shape of the abutment
- Octa / Non-Octa type
- To prevent rotation of prosthesis it has a flat section
- 1.2 Hex Driver
- Packing Unit : Abutment + Abutment Screw
- Tightening torque : 35Ncm

Angled Abutment

Angled Abutment

Angle	Platform	Ø4.8			Ø6.0		
	Diameter	Ø3.5			Ø4.3		
	Type	Octa A	Octa B	Non-Octa	Octa A	Octa B	Non-Octa
15	Code	AAI 35015YA	AAI 35015YB	AAI 35015	AAI 43015YA	AAI 43015YB	AAI 43015
20		-	-	-	AAI 43020YA	AAI 43020YB	AAI 43020
25		AAI 35025YA	AAI 35025YB	AAI 35025	-	-	-

Octa Non-Octa

Octa (A Type)

Octa (B Type)

- Used to modify the fixture's path and mainly used for anterior teeth.
- Depending on the angle slope, it is categorized into 15,20 and 25° Angled Abutment.
- Availability of A type and B type of Octa part overcomes the limitation of abutment direction.
- 1.2 Hex Driver
- Packing Unit : Abutment + Abutment Screw
- Tightening torque : 35Ncm

UCLA Abutment

UCLA Gold Abutment

Length	Platform	Ø4.8		Ø6.0	
	Type	Octa	Non-Octa	Octa	Non-Octa
11	Code	AIG4850Y	AIG4850N	AIG6061Y	AIG6061N

- Screw retained type restoration which use abutment screw to fix prosthesis.
- Can be used when there is limitation on path, esthetics, space etc.
- Directly casted on abutment to make inner part of prosthesis.
- Customized abutment can be made which can be applied to variety of cases.
- Strong enough for cases requiring difficult angle modification.
- After the customization, dental gold metal will be casted on it to make prosthesis.
- Melting range on cylinder area : 1400 ~ 1450°C
  (Obligation on non-mineral of noble or metal -free alloy casting)
- Depending on the connecting method with fixture, it is categorized as Octa / Non –Octa
- Use 1.2 Hex Driver · Tightening torque : 30 ~ 35Ncm
- Packing contents : Abutment + Abutment Screw (SSC2008H)

UCLA Plastic(Cast) Abutment

Length	Platform	Ø4.8		Ø6.0	
	Type	Octa	Non-Octa	Octa	Non-Octa
10	Code	CAI4812Y	CAI4812N	CAI6012Y	CAI6012N

- Its purpose of usage is the same as UCLA Gold Abutment but material for the abutment is plastic.
- Compared to UCLA Gold Abutment, its degree of precision or accuracy on connection
- area with abutment is slightly lower.
- After the customization, it is casted with dental alloy (Gold / non-precious metal alloy) to make prosthesis.
- Use 1.2 Hex Driver
- Packing contents : Abutment + Abutment Screw
- Tightening torque : Tightening smoothly before casting, 30 ~ 35Ncm after casting

Impression Coping & Fixture Analog

Pick-up Impression Coping

Length	Platform	Ø4.8		Ø6.0	
	Type	Octa	Non-Octa	Octa	Non-Octa
8	Code	IPI 48008Y	IPI 48008N	IPI 60008Y	IPI 60008N
12		IPI 48012Y	IPI 48012N	IPI 60012Y	IPI 60012N

- Custom/stock tray is used for pick-up type of impression taking
- Use 1.2 Hex Driver.
- Packing Unit : Impression Coping + Guide Pin (10/15mm)

Transfer Impression Coping

Length	Platform	Ø4.8		Ø6.0	
	Type	Octa	Non-Octa	Octa	Non-Octa
10	Code	ITI 48010Y	ITI 48010N	ITI 60010Y	ITI 60010N

- Stock tray is used for transfer type of impression taking.
- Circular triangle structure increases quality.
- Octa type is two-piece structure, Non-Octa type is One-piece structure
- 1.2 Hex Driver
- Packing Unit : Impression Coping + Guide Pin

Fixture Analog

Length	Platform	Ø4.8(Octa)	Ø6.0(Octa)
12	Code	RMI 48012Y	RMI 60012Y

- Providing anchor for fabricating implant prosthesis on working model.
- Packing Unit : Fixture Analog

Solid Abutment

Solid Abutment

Length	Platform	Ø4.8	Ø6.0
	Diameter	Ø3.5	Ø4.3
4	Code	AMI 48354	AMI 60434
5.5		AMI 48355	AMI 60435
7		AMI 48357	AMI 60437

· This is a cemented type abutment which use dental cement to fix the prosthesis.
· Abutment and screw are in one-piece structure.
· Considering the esthetic purpose, gingival area is colored in gold.
· Use 1.2 Hex / Solid Abutment Driver
· Packing contents : Abutment + Protect Cap
· Tightening torque : 30 ~ 35Ncm

Protect Cap

Length	Platform	Ø4.8	Ø6.0
	Diameter	Ø5.5	Ø7
4	Code	HMI 48554	HMI 60704
5.5		HMI 48555	HMI 60705
7		HMI 48557	HMI 60707

· Protect the abutment in the mouth and minimize the discomfort for the patient.
· Can be applied to substructure of temporary prosthesis.
· Convenient locking mechanism.
· Packing Unit : Protect Cap

Impression Cap

Length	Platform	Ø4.8	Ø6.0
	Diameter	Ø5.7	Ø7.0
4	Code	IPI 48001	IPI 60001

· Used to take impression of Solid Abutment
· Should be connected with Positioning Cylinder
· Packing Unit : Impression Cap

Positioning Cylinder

Length	Platform	Ø4.8	Ø6.0
4	Code	IPI 48002Y	IPI 60002Y
5.5		IPI 48002G	IPI 60002G
7		IPI 48002B	IPI 60002B

· Used to take impression for Solid Abutment
· Convenient locking mechanism
· Packing Unit : Positioning Cylinder

Solid Abutment Analog

Length	Platform	Ø4.8	Ø6.0
4	Code	RMI 48004N	RMI 60004N
5.5		RMI 48005N	RMI 60005N
7		RMI 48007N	RMI 60007N

· Solid Abutment is formed on working model.
· Packing Unit : Solid Abutment Analog

Plastic Coping

Length	Platform	Ø4.8		Ø6.0	
	Diameter	Ø4.8		Ø6.1	
	Type	Single	Bridge	Single	Bridge
10	Code	IPI 48004 (Single)	IPI 48004N(Bridge)	-	-
10		-	-	IPI 60004 (Single)	IPI 60004N(Bridge)

· Can be used as prosthesis' frame work by installing Solid Abutment Analog.
· Different coloring provides easy identification on types of case. (Single : Red, Bridge : White)
· Packing Unit : Plastic Coping

Shoulder Analog & Pin

Length	Platform	Ø4.8	Ø6.0
10	Code	RMI 48001	RMI 60001

· Component for modifying the Solid Abutment
· Fixture platform can be formed on working model
· Pin should be connected with Shoulder Analog to protect the working model
· Packing Unit : Shoulder Analog & Pin

Excellent Solid Abutment

Excellent Solid Abutment

Length	Diameter	Ø4.3
4	Code	AMI 48434EX
5.5		AMI 48435EX
7		AMI 48437EX

· Cemented type abutment
· Abutment and screw are in one-piece structure.
· 1.2 Hex Driver
· Packing Unit : Abutment + Protect Cap
· Tightening torque : 35Ncm

Protect Cap

Length	Diameter	Ø5.5
4	Code	HMI 48554EX
5.5		HMI 48555EX
7		HMI 48557EX

· Used to protect abutment in the patient's mouth and minimize the discomfort for the patient.
· Can be applied to substructure of temporary prosthesis.
· Convenient locking mechanism.
· Packing Unit : Protect Cap

Impression Cap

Length	Diameter	Ø5.7
4	Code	IPI 48002YEX
5.5		IPI 48002GEX
7		IPI 48002BEX

Length 4 | 5.5 | 7

· Used to take impression of Excellent Solid Abutment
· Connected with Positioning Cylinder
· Convenient locking mechanism.
· Packing Unit : Impression Cap

Excellent Solid Abutment Analog

Length	Diameter	Ø4.8
4	Code	RMI 48004EX
5.5		RMI 48005EX
7		RMI 48007EX

· Excellent Solid Abutment is formed on working model.
· Packing Unit : Excellent Solid Abutment Analog

Plastic Coping

Length	Diameter	Ø5.5
12	Code	IPI 48004EX
5.5		IPI 48004NEX

Single Bridge

· Can be used as prosthesis' frame work by installing Excellent Solid Abutment Analog
· Different coloring provides easy identification on types of case. (Single : Red, Bridge : White)
· Packing Unit : Plastic Coping

Octa Abutment

Octa Abutment

Platform	Ø4.8	Ø6.0
Diameter	Ø3.5	Ø4.3
Code	ACI 48302	ACI 65302

- Designed abutment to mount prosthesis by turning the internal connection into external connection
- Used to create screw retained prosthesis on poor path bridge cases.
- Use Octa Abutment Driver
- Packing contents : Abutment + Holder
- *Holder installation : Convenient to install in patient's mouth.
- Tightening torque : 30 ~ 35Ncm

Healing Cap

Length	Platform	Ø4.8
	Diameter	Ø5.2
4	Code	HCI 48504

- To protect installed Octa Abutment and minimize the discomfort for patient.
- 1.2 Hex Driver
- Packing Unit : Healing Cap +Cylinder Screw
- Tightening torque : 20Ncm

Pick-up Impression Coping (Octa)

Length	Platform	Ø4.8		Ø6.0	
	Type	Octa	Non-Octa	Octa	Non-Octa
10	Code	IPI 48610	IPI 48610N	IPI 60710	IPI 60710N

- Pick-up type impression-taking process using custom/stock tray.
- 1.2 Hex Driver
- Packing Unit : Impression Coping +Guide Pin

Transfer Impression Coping(Octa)

Length	Platform	Ø4.8	Ø6.0
4	Code	IOTI 48010	IOTI 60010

- Transfer type impression taking process using stock tray
- Double sided structure which elevates the quality
- 1.2 Hex Driver
- Packing Unit : Impression Coping +Guide Pin

Octa Abutment Analog

Length	Platform	Ø4.8	Ø6.0
12	Code	RCI 48014	-
10		-	RCI 60014

- Provides anchor in model for fabricating Octa Abutment configuration.
- Packing Unit : Octa Abutment Analog

Temporary Cylinder

Length	Platform	Ø4.8		Ø6.0	
	Type	Octa	Non-Octa	Octa	Non-Octa
10	Code	ITC 48010	ITC 48010N	ITC 60010	ITC 60010N

- Cylinder for temporary prosthesis
- Octa type / Non-Octa type
- 1.2 Hex Driver
- Packing Unit : Temporary Cylinder+Cylinder Screw
- Tightening torque : 20Ncm

Cemented Cylinder

Length	Platform	Ø4.8				Ø6.0	
	Diameter	Ø5.0		Ø5.8		Ø6.4	
	Type	Octa	Non-Octa	Octa	Non-Octa	Octa	Non-Octa
8	Code	ICC 48508	ICC 48508N	ICC 48588	ICC 48588N	-	-
9		-	-	-	-	ICC 60649	ICC 60649N

- Screw / Cement-Retained Cyllinder
- Octa type / Non-Octa type
- 1.2 Hex Driver
- Packing Unit : Cemented Cylinder+Cylinder Screw
- Tightening torque : 20Ncm

Gold Cylinder

Length	Platform	Ø4.8		Ø6.0	
	Type	Octa	Non-Octa	Octa	Non-Octa
12	Code	AGI 48504	AGI 48504N	AGI 60004N	AGI 60004N

- Screw / Cement-Retained Cyllinder
- Octa type / Non-Octa type
- 1.2 Hex Driver
- Packing Unit : Gold Cylinder+Cylinder Screw
- Tightening torque : 20Ncm

Plastic Cylinder

Length	Platform	Ø4.8		Ø6.0	
	Diameter	Ø5.0		Ø6.3	
	Type	Octa	Non-Octa	Octa	Non-Octa
10	Code	API 48514	API 48515N	API 60714	API 60714N

- Cast in premium gold alloy/non presious alloy after customization.
- Less precise than the gold cylinder.
- Octa type / Non-Octa type
- 1.2 Hex Driver
- Packing Unit : Plastic Cylinder+Cylinder Screw
- Tightening torque : Gently tightening before the casting, 20Ncm after casting

Ball Abutment

Ball Abutment

Length	Platform	Ø4.8
	Diameter	Ø3.5
0	Code	ABI 48350
2		ABI 48352
4		ABI 48354

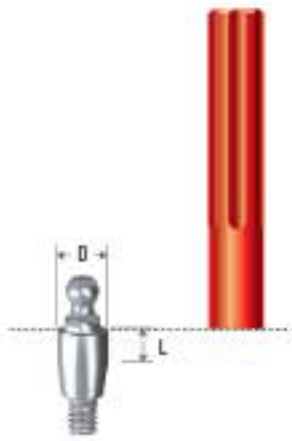

- Used to create over-denture for edentulous patient.
- Used when fixed type prosthesis is difficult due to severe bone or soft tissue loss.
- Retain the fixation force by changing O-Ring
- Path angle covers maximum of 20°
- Use Ball Abutment Driver
- Packing Unit : Abutment + Holder + O-Ring
- Tightening torque : 35Ncm

Ball Abutment Analog

Length	Platform	Ø4.8
	Diameter	Ø4.1
12	Code	RBN 40412

- Provides anchor point for ball abutment on working model.
- Packing Unit : Analog

Ball Cap

Length	Platform	Ø5.0
4	Code	BC 5004

- Outstanding consistency and Clip-on
- Packing Unit : Ball cap + O-Ring (Black:Dental lab use / Orange: Denture use)
- O-Ring : Dental Lab use(Black), Denture use(Orange)

Retainer

Length	Platform	Ø5.0
2	Code	RT 0502

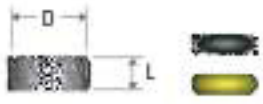

- Advantageous when occlusal distance is low when compared to Ball Cap.
- Packing Unit : Retainer + O-Ring (Black:Dental lab use / Orange: Denture use)
- O-Ring : Dental Lab use(Black), Denture use(Orange)

O-Ring

Color	Platform	Ø5.0
Black	Code	OR 0450 B
Orange		OR 0451 O

- Black : For dental lab use, fabrications with high retention.
- Orange : For clinical use (Over 6Ncm)
- Packing Unit : O-Ring 1 Piece

Surgical Kit

SURGICAL KIT UF SYSTEM

UF(II) Narrow Kit

Order Code : UF(M) 08
Fixture : UFII Narrow Ø3.0 / Ø3.3

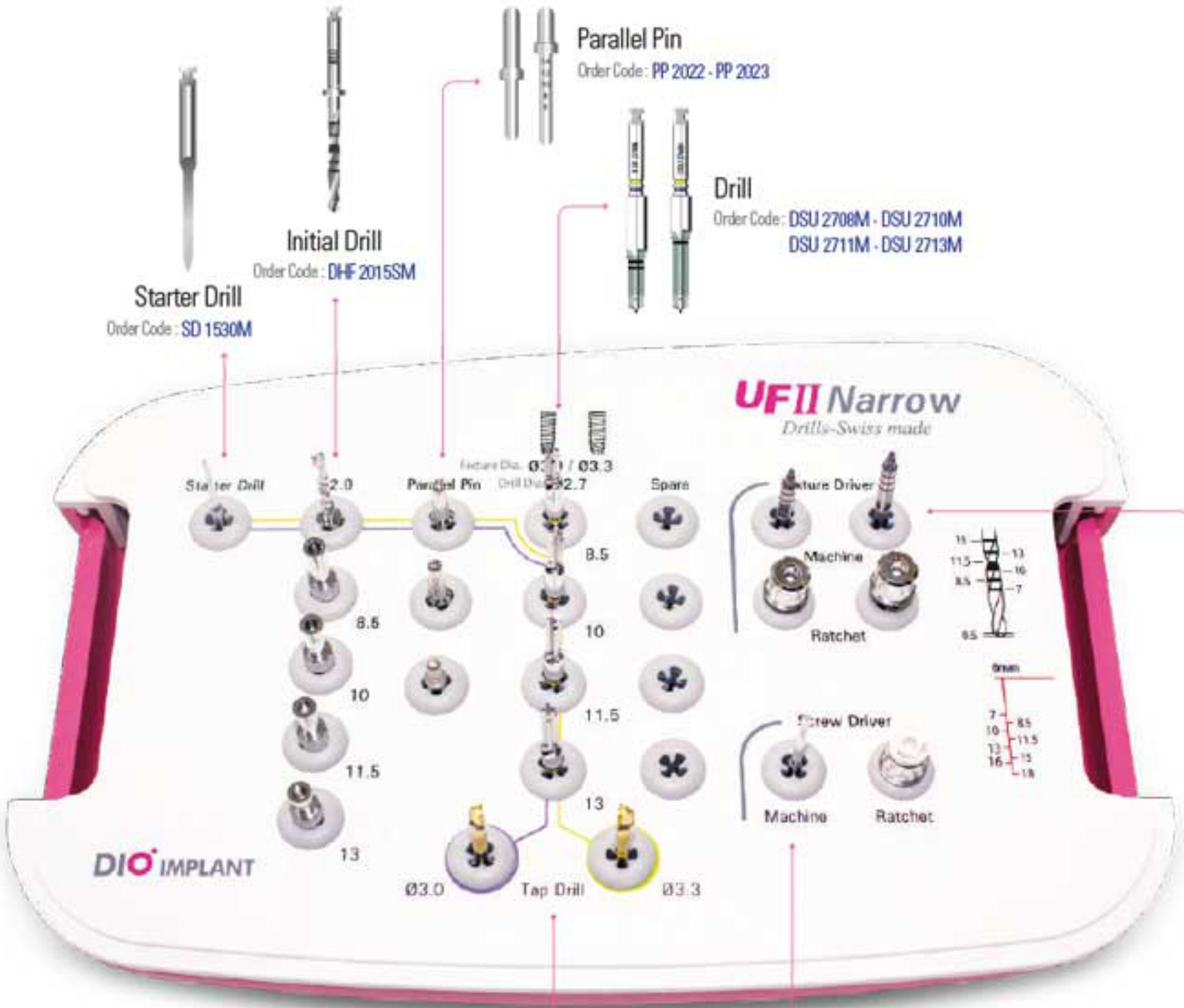

*Bottom Case

Torque Wrench
Order Code : DTW 0060

Depth Gauge
Order Code : DPG 2050

Tap Drill
Order Code : UNTD 3015 - UNTD 3315

Fixture Driver
Order Code : UNFDC 3006* - UNFDW 3006*
UNFDC 3012 - UNFDW 3012
UNFDC 3018 - UNFDW 3018
- Maximum tightening torque : 50Ncm
- Recommended frequency of use : 20times

1.2 Hex Screw Driver
Order Code : MD 1230 - HD 1220A

Surgical Tool

Starter Drill

L1 / L2	Ø1.5
30 / 15	SD 1530M

Drill

L1 / L2	Ø2.7
30 / 15	DSU 2708M
33 / 10	DSU 2710M
33 / 11.5	DSU 2711M
33 / 13	DSU 2713M

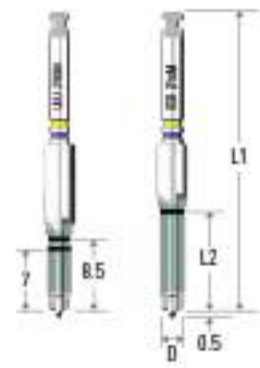

Initial Drill

L1 / L2	Ø2.0
34.5 / 17.5	DHF 2015SM

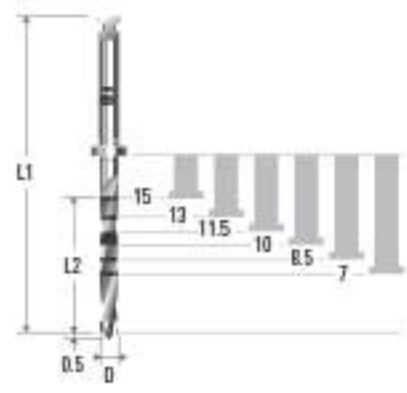

Parallel Drill

L1 / L2	Ø2.0 / Ø2.7
22 / 10	PP 2022
23 / 16	PP 2023

Tap Drill

L1 / L2	Ø3.0	Ø3.3
33 / 8.5	UNTD 3015	UNTD 3315

Fixture Driver

Length	Ø3.0 / Ø3.3	
	Machine	Ratchet
6	UNFDC 3006*	UNFDW 3006*
12	UNFDC 3012	UNFDW 3012
18	UNFDC 3018	UNFDW 3018

Maximum tightening torque : 50Ncm
·Recommended frequency of use : 20times
*Option) Sold seperately

1.2 Hex Screw Driver

Length	Ø3.0	Ø3.3
16	MD 1230	
20		HD 1220A

Depth Gauge

Diemeter	Ø2.0
Code	DP 2050

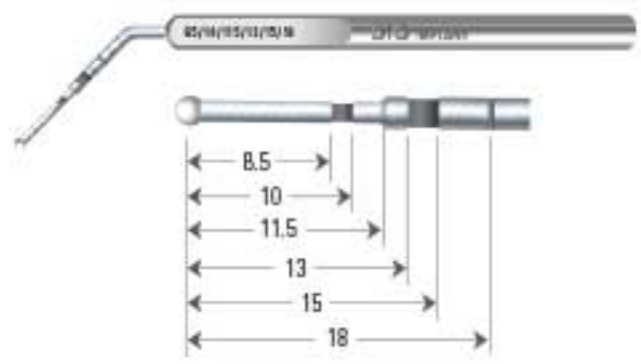

Torque Wrench

Code
DTW 0060

· Used for fixture implantation or fastening screw
· Torque values (0, 15, 35, 50Ncm) are laser etched on handle
· convenient disassembly for easy cleaning

Surgical Protocol

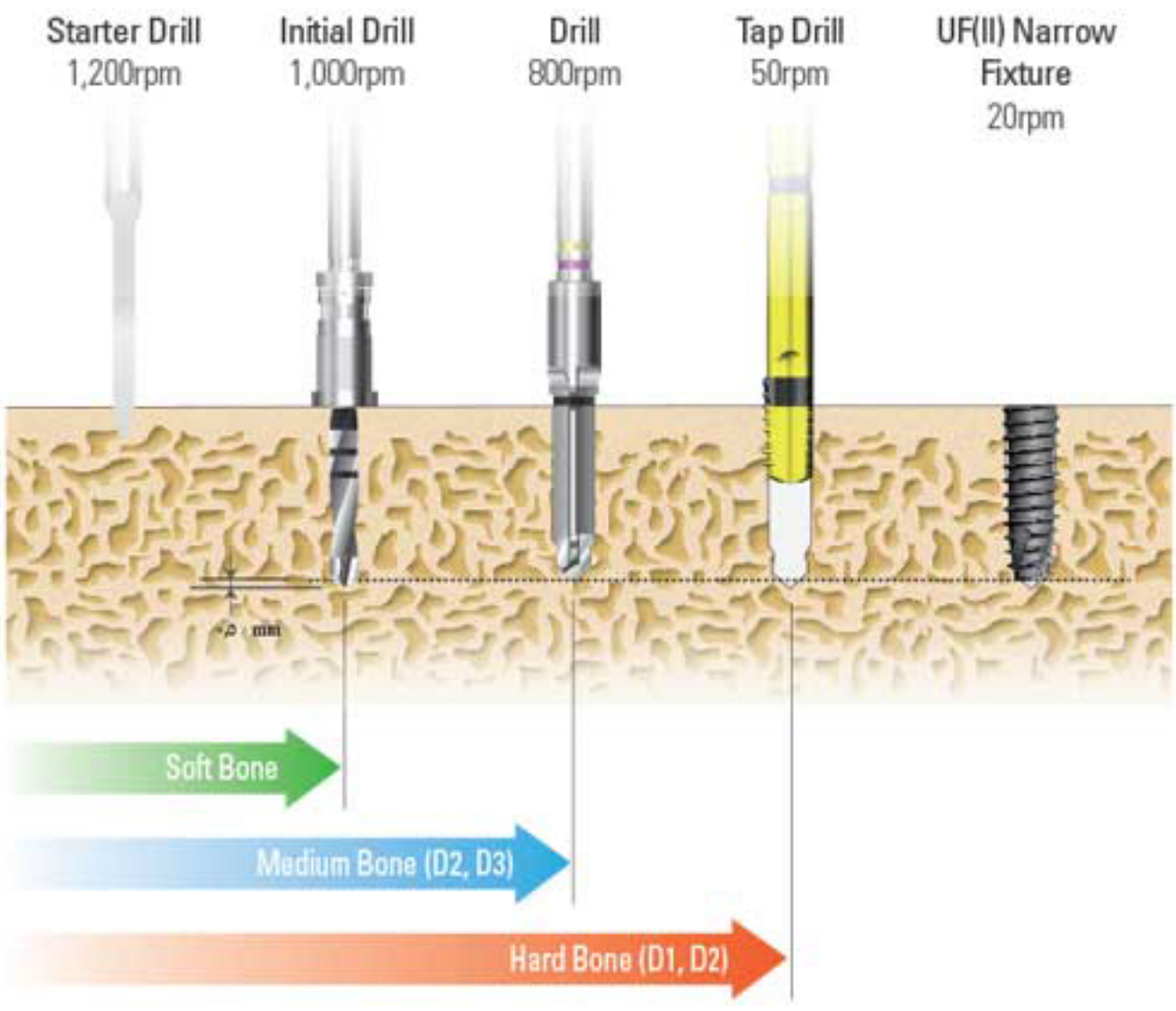

Tap Drill

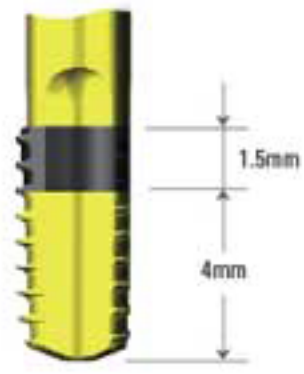

· Recommended torque : 20–40Ncm
Over 50Ncm is not recommended

UF Master Kit

Order Code : UF 06
Fixture : UFII Narrow Ø3.0 / Ø3.3
UFII Regular Ø3.8 / Ø4.0 / Ø4.5 / Ø5.0 / Ø5.5

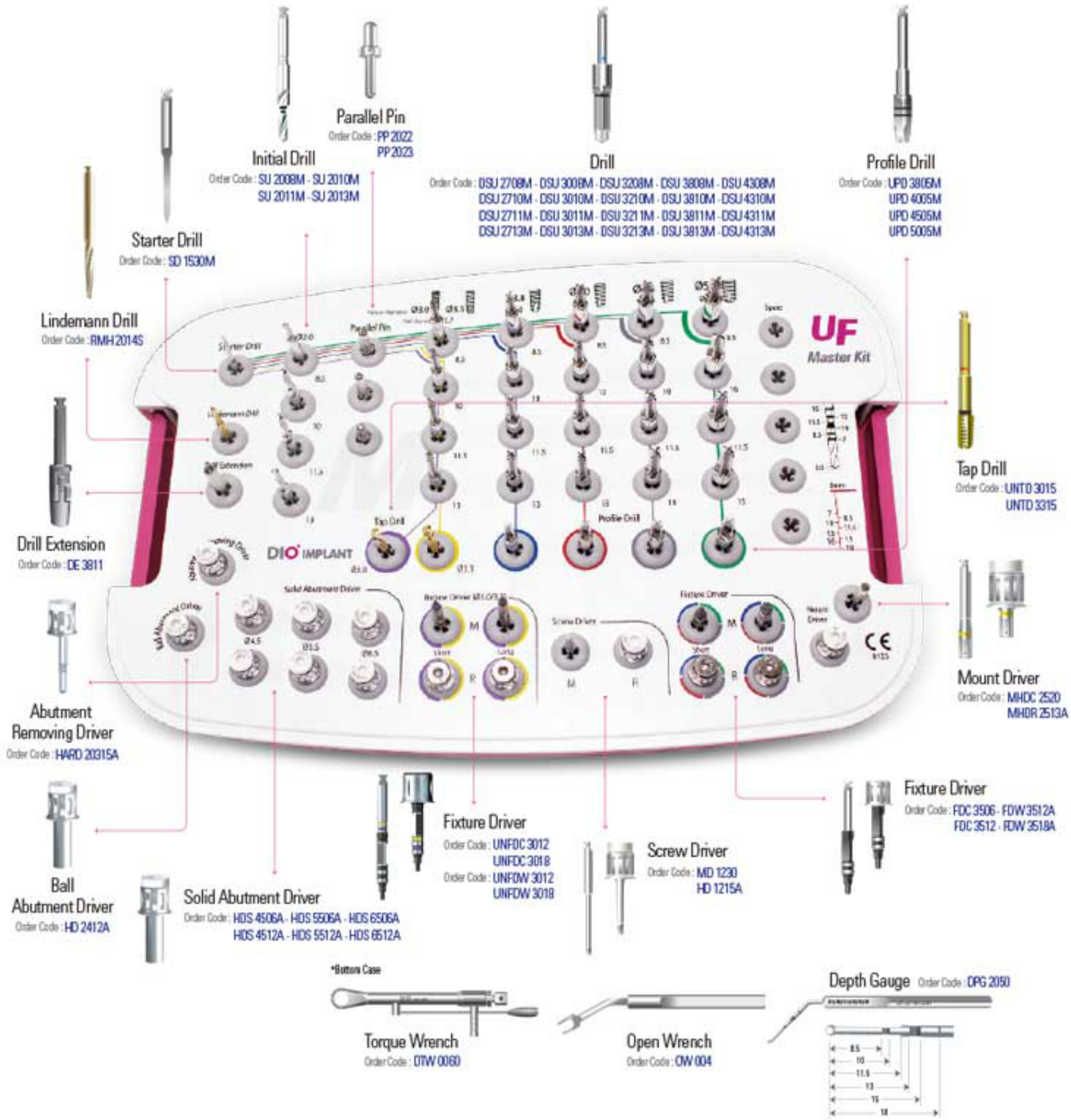

SURGICAL KIT UF SYSTEM

UF Surgical Kit

Order Code : UF 07
Fixture : UFII Narrow Ø3.0 / Ø3.3
UFII Regular Ø3.8 / Ø4.0 / Ø4.5 / Ø5.0 / Ø5.5

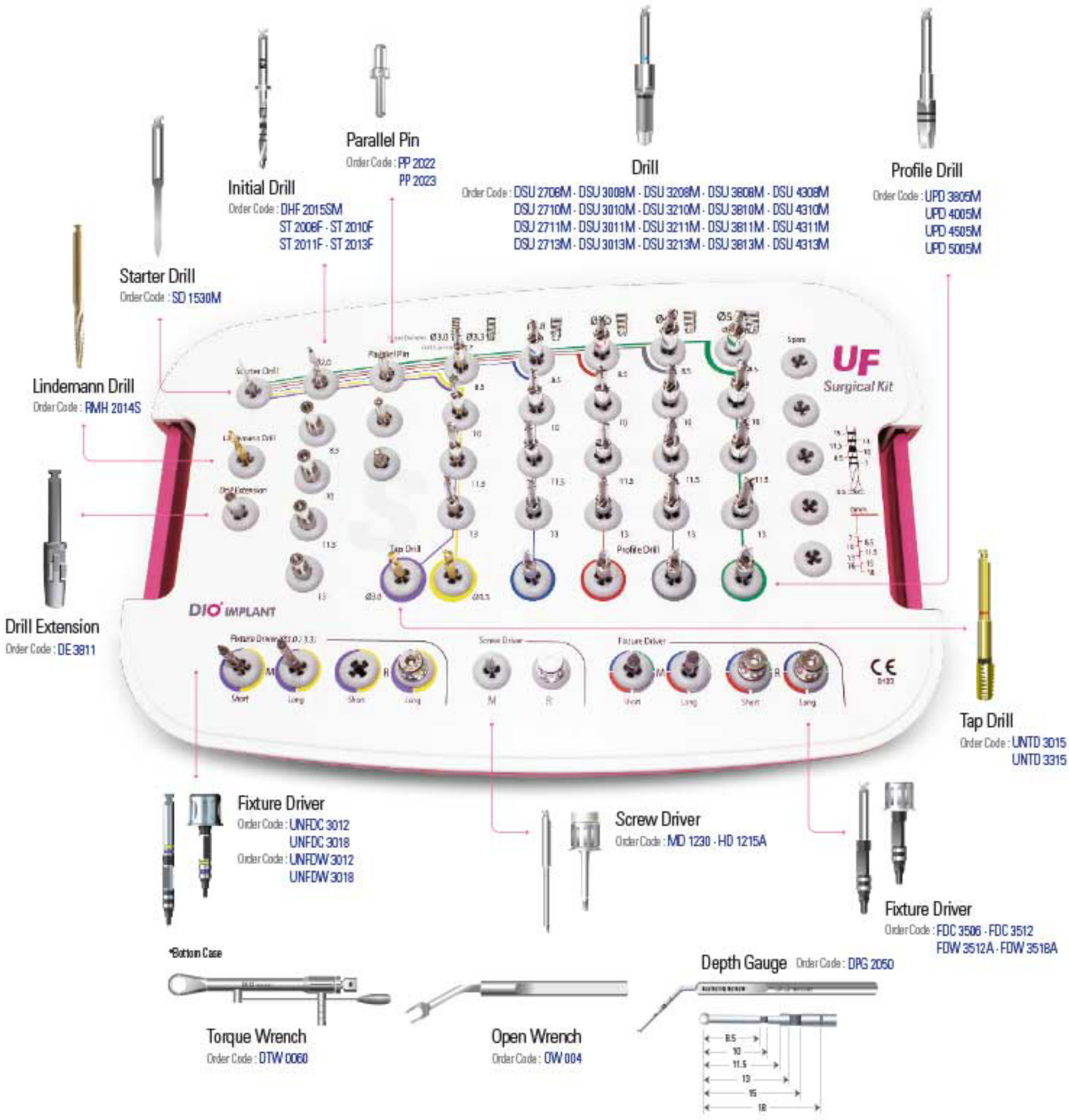

Surgical Tool

Starter Drill

L1 / L2	Ø1.5
30 / 15	SD 1530M

Initial Drill

L1 / L2	Ø2.0
34.5 / 17.5	DHF 2015SM

Length	Ø2.0
8.5	DSU 2008M
10	DSU 2010M
11.5	DSU 2011M
13	DSU 2013M

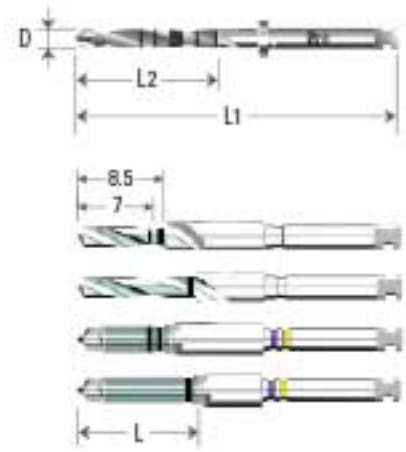

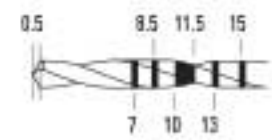

Parallel Pin

L1 / L2	Ø2.0 / Ø2.7
15 / 8	PP 2015
22 / 10	PP 2022
23 / 16	PP 2023

L1 / L2	Ø0.6 / Ø2.0	Ø0.75 / Ø2.0
23 / 15	PP 1223	PP 1523

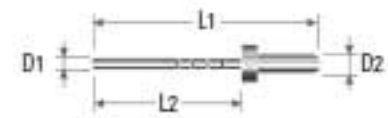

Drill

L1 / L2	Ø2.0	Ø2.6	Ø2.9	Ø3.1	Ø3.7	Ø4.2
33 / 9	DSU 2008M	DSU 2708M	DSU 3008M	DSU 3208M	DSU 3808M	DSU 4308M
33 / 10	DSU 2010M	DSU 2710M	DSU 3010M	DSU 3210M	DSU 3810M	DSU 4310M
33 / 12	DSU 2011M	DSU 2711M	DSU 3011M	DSU 3211M	DSU 3811M	DSU 4311M
33 / 13	DSU 2013M	DSU 2713M	DSU 3013M	DSU 3213M	DSU 3813M	DSU 4313M
Color		Purple Yellow	Blue	Red	Gray	Green

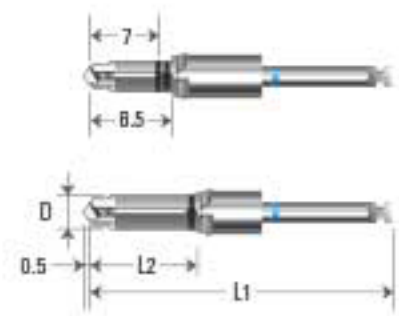

Profile Drill

L1 / L2	Ø3.8	Ø4.0	Ø4.5	Ø5.0
30 / 16	UPD 3805M	UPD 4005M	UPD 4505M	UPD 5005M
Color	Blue	Red	Gray	Green

Tap Drill

Fixture / Drill	Ø3.0	Ø3.3	Ø3.8	Ø4.0	Ø4.5	Ø5.0
Code	UNTD 3015	UNTD 3315	UT(II) 3815	UT(II) 4015	UT(II) 4515	UT(II) 5015
Color	Purple	Yellow	Blue	Red	Gray	Green

Fixture Driver

Length	Narrow		Regular	
	Machine	Ratchet	Machine	Ratchet
6	UNFDC 3006*	UNFDW 3006*	FDC 3506	FDW 3506A*
12	UNFDC 3012	UNFDW 3012	FDC 3512	FDW 3512A
18	UNFDC 3018	UNFDW 3018	FDC 3518*	FDW 3518A

*Option) Sold separately

Mount Driver

Length	2.5 Hex	
	Machine	Ratchet
6	MHDC 2520	MHDR 2513A
11	MHDC 2525	MHDR 2518A

Screw Driver

L1 / L2	1.2 Hex	Length	1.2 Hex
	Machine		Ratchet
19 / 5	MD 1219*	5	HD 1205A*
22 / 8	MD 1222*	10	HD 1210A*
30 / 16	MD 1230	15	HD 1215A
		20	HD 1220A*

*Option) Sold separately

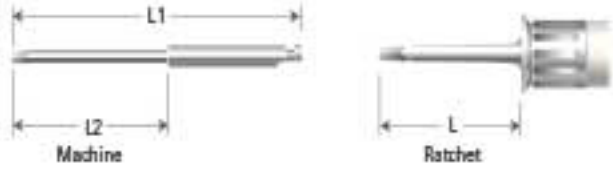

Solid Abutment Driver

Length	Ø4.5	Ø5.5	Ø6.5
6	HDS 4506A	HDS 5506A	HDS 6506A
12	HDS 4512A	HDS 5512A	HDS 6512A

Ball Abutment Driver

Length	2.4 Hex
6	HD 2406A
12	HD 2412A

Removing Driver

Length	M 2.0
15	HARD 20315A
20	HARD 20320A

Positioning Guide

Length	Ø2.0
7	PG 0060

Drill Extension

L1 / L2	Code
26 / 12	DE 3811

Lindemann Drill

L1 / L2	Ø1.4 / Ø2.0
30 / 14	RMH 2014S

Path Pin

Length	Ø3.5
12	DPP 3512

Angled Path Pin

Angled	Ø4.5	
	Hex A	Hex B
15°	DAP 4515A	DAP 4515B
Color	● Blue	● Green

Depth Gauge

Diemeter	Ø2.0
Code	DP 2050

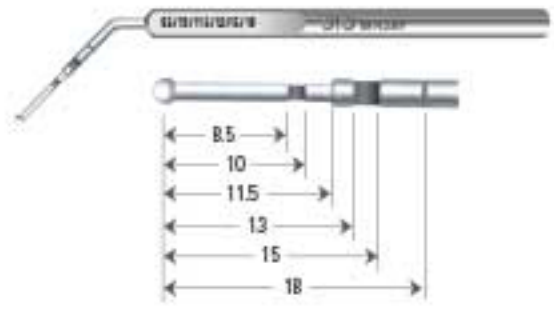

Torque Wrench

Code
DTW 0060

- Used for fixture implantation or fastening screw
- Torque values (0, 15, 35, 50Ncm) are laser etched on handle
- convenient disassembly for easy cleaning

Open Wrench

Code
OW 004

- Used for weak bone type
- 30° of neck angle for the easy use

Surgical Protocol

Bone Level Application

Drill

Using 8.5mm Drill with laser marking to place 7mm implant.

Profile Drill

Drilling depth can be effect initial stability.

Lower
Used to reduce applicable torque on D2, D3 Bone.

Upper
Used to reduce applicable torque on D1, D2 Bone.

Bone Level 1mm Sub Application

Tap Drill

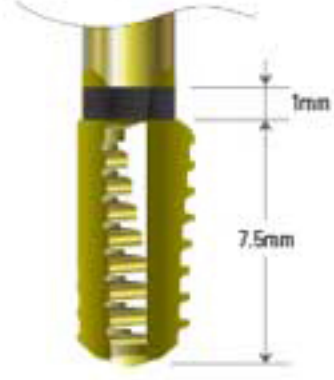

SURGICAL KIT UF SYSTEM

UF(II) Wide Kit

Order Code : UF 09
Fixture : UFII Wide Ø6.0 / Ø6.5 / Ø7.0

Trephine Drill
Order Code : TRD 4739
TRD 5244
TRD 5749

Final Drill
Order Code : DSU 5407M · DSU 5907M · DSU 6407M
DSU 5408M · DSU 5908M · DSU 6408M
DSU 5410M · DSU 5910M · DSU 6410M
DSU 5411M · DSU 5911M · DSU 6411M

Fixture Driver
Order Code : FDC 3506 · FDW 3506A
FDC 3512 · FDW 3512A

Tap Drill
Order Code : UT(II) 6006 · UT(II) 6506 · UT(II) 7006

Surgical Tool

Trephine Drill

Diameter	Ø4.7	Ø5.2	Ø5.7
Code	TRD 4739	TRD 5244	TRD 5749

Final Drill

L	Ø5.4	Ø5.9	Ø6.4
7	DSU 5407M	DSU 5907M	DSU 6407M
8.5	DSU 5408M	DSU 5908M	DSU 6408M
10	DSU 5410M	DSU 5910M	DSU 6410M
11.5	DSU 5411M	DSU 5911M	DSU 6411M

Tap Drill

Diameter	Ø5.4	Ø5.9	Ø6.4
Code	UT(II) 6006	UT(II) 6506	UT(II) 7006

Fixture Driver

Length	Machine	Ratchet
6	FDC 3506	FDW 3506A
12	FDC 3512	FDW 3512A
18	FDC 3518	FDW 3518A

Surgical Protocol

Fixture Length 7mm

Extraction Socket &
Replace failed Implant

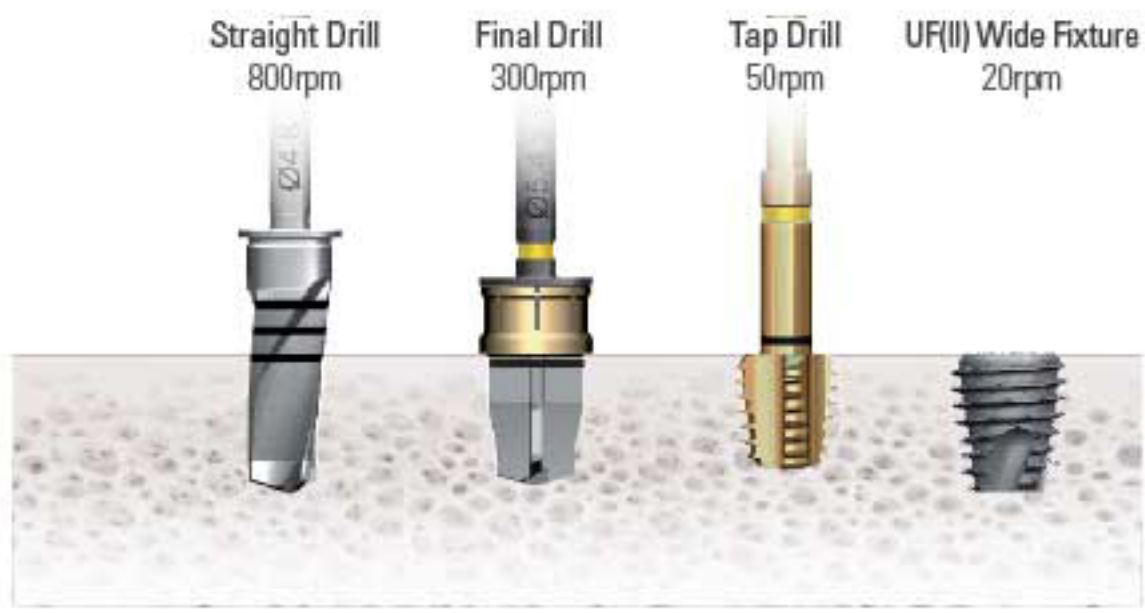

SURGICAL KIT UF SYSTEM

UF(II) Internal Non Submerged Kit

Order Code : UF 12
Fixture : UFII Internal Ø3.6 / Ø4.0 / Ø4.5 / Ø5.0

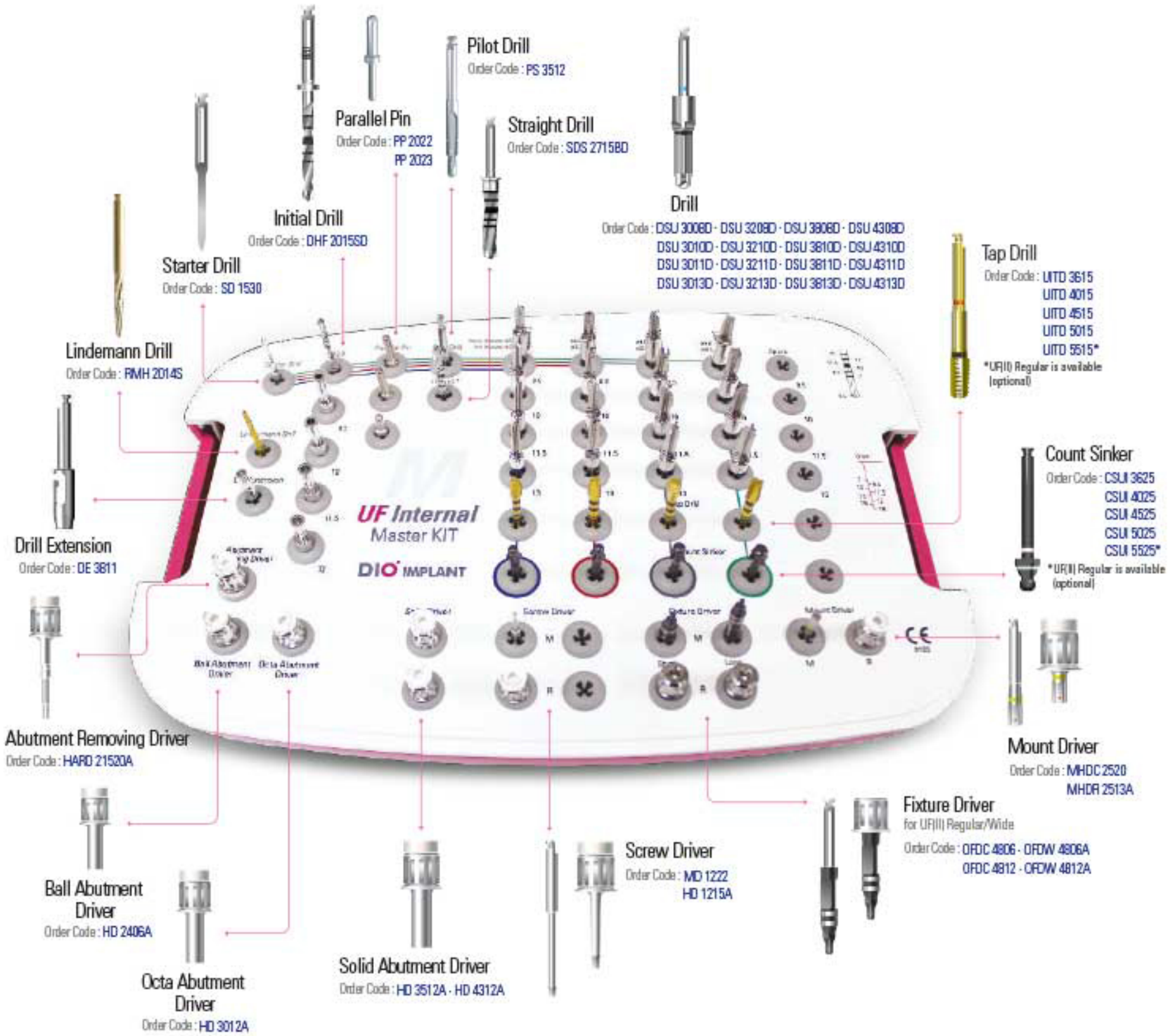

*Bottom Case

Torque Wrench
Order Code : DTW 0060

Open Wrench
Order Code : OW 004

Depth Gauge Order Code : DPG 2060

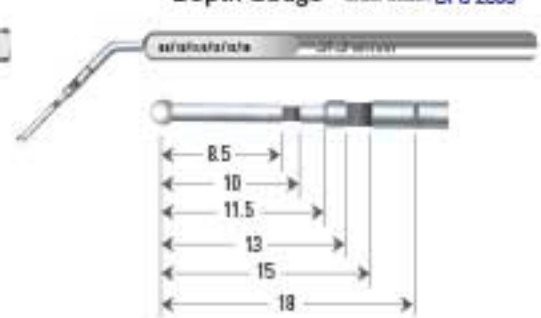

Surgical Tool

Starter Drill

L1 / L2	Ø1.5
30 / 15	SD 1530

Initial Drill

L1 / L2	Ø2.0
34.5 / 17.5	DHF 2015SD

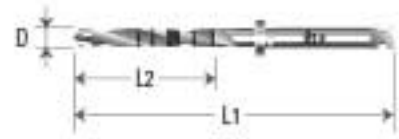

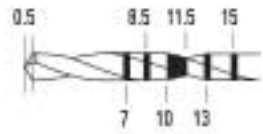

Parallel Pin

L1 / L2	Ø2.0 / Ø2.7
22 / 10	PP 2022
23 / 16	PP 2023

Pilot Drill

L1 / L2	Ø2.0 / Ø2.7
31 / 17	PS 3512

Straight Drill

L1 / L2	Ø2.7
33 / 15	SDS 2715BD

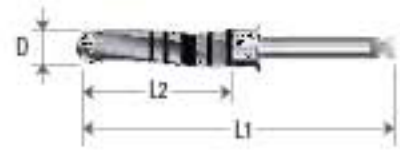

Drill

L1 / L2	Ø2.9	Ø3.1	Ø3.7	Ø4.2
33 / 8	DSU 3008D	DSU 3208D	DSU 3808D	DSU 4308D
33 / 10	DSU 3010D	DSU 3210D	DSU 3810D	DSU 4310D
33 / 12	DSU 3011D	DSU 3211D	DSU 3811D	DSU 4311D
33 / 13	DSU 3013D	DSU 3213D	DSU 3813D	DSU 4313D
Color	● Blue	● Red	● Gray	● Green

Fixture Driver

Length	Ø2.9 octa	
	Machine	Ratchet
6	OFDC 4806	OFDW 4806A
12	OFDC 4812	OFDW 4812A

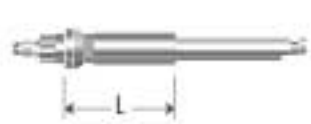

Lindemann Drill

L1 / L2	Ø1.4 / Ø2.0
30 / 14	RMH 2014S

Drill Extension

Length	Code
11	DE 3811

Removing Driver

Length	M 2.0
20	HARD 21520A

Solid Abutment Driver

Length	Ø3.5	Ø4.3
12	HD 3512A	HD 4312A

Ball Abutment Driver

Length	Ø2.4
6	HD 2406A

Octa Abutment Driver

Length	Ø3.0
12	HD 3012A

Tap Drill

Length	Ø3.6	Ø4.0	Ø4.5	Ø5.0	Ø5.5
15	UITD 3615	UITD 4015	UITD 4515	UITD 5015	UITD 5515*

*Option) Sold separately

Countsinker

Length	Ø3.6	Ø4.0	Ø4.5	Ø5.0	Ø5.5
25	CSUI 3625	CSUI 4025	CSUI 4525	CSUI 5025	CSUI 5525*

*Option) Sold separately

Screw Driver

L1 / L2	1.2 Hex Machine	Length	1.2 Hex Ratchet
22 / 8.5	MD 1222	15	HD 1215A

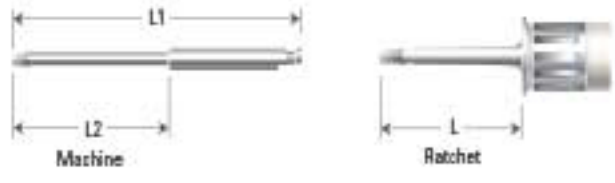

Mount Driver

Length	2.5 Hex	
	Machine	Ratchet
6	MHDC 2520	MHDR 2513A

Depth Gauge

Diameter	Ø2.0
Code	DPG 2050

Torque Wrench

Code
DTW 0060

- Used for fixture implantation or fastening screw
- Torque values (0 ,15 ,35 ,50Ncm) are laser etched on handle
- convenient disassembly for easy cleaning

Open Wrench

Code
OW 004

- Used for weak bone type
- 30° of neck angle for the easy use

Surgical Protocol

General principles of **surgical tool management**

1. Because all surgical tools are provided in a non-sterile condition, they must be cleansed and sterilized before use.

Caution

Wrong cleansing and sterilizing process causes corrosion and damage to the tools and if used directly, it may be the cause of 2nd infection.

2. The recommended number of use of a drill is 20~30 times based on the bone status, and it must be replaced if the blade has been damaged or transformed.

Caution

If damaged drill is used, Heat Necrosis may occur

3. When managing the surgical tool, one must wear a mask and a glove to prevent infection.

Before sterilization

1. To prevent contaminants such as blood, tissue cell or bone residue from attaching to the surface of the instruments, the instruments must be immersed in an antiseptic solution right after use.

2. When using antiseptic solution, to prevent corrosion or bronzing, one must follow directions given by the manufacturer of the concentration of the antiseptic and the duration of the instrument immersion in the antiseptic.

Check

Concentration : completely liquefy the concentrate before placing the instruments in the antiseptic solution.

Immersion Duration : The instruments must not be immersed more than a day

3. The instruments must be fully immersed in the antiseptic solution.

4. For a decrease in sterilizing power and to prevent corrosion, the antiseptic solution must be replaced every day.

Before rinse

To prevent protein from clotting in 45 degrees temperature Celsius, the instruments must be rinsed in running cold water.

Caution

Cleanse the instruments right after preliminary rinse

1 Sterilization

1. Must only use antiseptic solution that is FDA and CE approved, and you must follow the manufacturer's directions

2. When cleansing metal instruments, corrosion free antiseptic solution and cleansing product use is recommended.

3. For safety, one must always wear personal protection gear such as gloves, glasses, and masks.

4. The user has an obligation to be responsible for the sterilization and management of the instrument.

5. Restriction and limitation of the instrument reuse:

- With repetition of cleansing, the life expectancy of all instruments will decrease. If the instruments show corrosion, transformation or discoloring of the marking area, it means that they have exceeded the safety criteria that is required for use.
- Product with a disposable mark cannot be reused.
- Tungsten carbide burs, plastic composition and NiTi instruments can be damaged with hydrogen peroxide, and aluminum material instruments can be damaged by caustic soda solution.
- Acid solution (pH < 6) and alkaline solution (pH > 8) must not be used.

Caution

After use, if the contaminants such as residual bone or blood stain are not completely removed, it may lead to corrosion; therefore all separable instruments must be disassembled before the cleansing process.

2 Cleanse / Dry

1. Contaminants must be completely removed using a soft brush.
Do not use a wire brush or stainless material brush, and do not put too much pressure.

2. Immerse the products in the antiseptic solution of their characteristics and clean with an ultrasonic cleaner.
However, do not cleanse the different materials together. Also, when immersing the instruments in the ultrasonic cleaner, make sure that the instruments do not touch each other.

3. Make sure that debris is not seen with the naked eye.
- **Products that are fractured or transformed must be discarded.**
- **One should follow the recommendations for the level of concentration or the length of time provided by the manufacturer.**
- **The antiseptic solution must not include aldehyde, di- or tri-ethanolamines component to control the corrosion.**

4. After cleaning, the products must be rinsed with distilled water or deionized water for at least a minute.
If the antiseptic solution contains corrosion inhibitor, rinsing before placing in the sterilizer is recommended.

5. To prevent corrosion or water stain on the instruments, completely dry with a dryer or filtered compressed air

6. To prevent corrosion, decrease in sterilizing power, and contamination, antiseptic must be supplemented every day.

Caution

If the instruments are not properly rinsed, residue is left behind, or is not properly dried, the sterilization process might discolor or corrode the instruments, and therefore the whole process must be gone through again.

Caution

Corrosion may start if debris such as blood stain or bone residue is not completely removed. They must be cleansed right after use and the debris must be completely removed when cleaning.

Check

Check on the instruments for faults (fracture, transformation, or corrosion).
If necessary, assemble the instruments.
Contaminated instruments must be cleansed or disinfected. Transformations may affect the safety, performance or tolerance of the instruments; in other words; bent, damaged (fractured, corroded), or faulty products (discoloration of marking area, Loss) must be destroyed.

3 Packaging

1. Check on the dry status of the instruments and pack in the sterilized wrapping paper.

2. On the sterilized wrapping paper, attach a direction tape to check the date of sterilization. Check on the expiration date on the sterilized wrapping paper. Wrapping paper must be able to withstand up to 141 degrees that coincides with the EN ISO 11607.

4 Pasteurization

1. Pasteurization process must follow the sterilizer equipment manufacturer. ⊠ **4~18 minutes in 134℃ for autoclave sterilization.**

2. Instruments and plastic components must be sterilized based on their packaging label.
   - Sterilizer must coincide with the requirements of EN 13060 and EN285.
   - Sterilization process must regard the ISO 11607.
   - One must follow the sterilization process and maintenance process of the sterilizer provided by the manufacturer.
   - Efficiency management (Proper packaging, no humidity, change in color of the sterilization dashboard)

Caution

- **The products must not touch the inner part of the sterilization equipment, and the sterilization degree must be lower than 150 ℃**
- **The products that were not properly cleansed or dried may generate corrosion. If they were not cleansed, not properly dried or corroded, separate them from the rest or remove the faults. (Do not sterilize the corroded instruments with the noncorroded products together)**
- **For sterilization, use only salt-free water or distilled water for the solution. (Do not use tap water)**
- **Check if the instruments are fully dried, and do not leave them in a place with high moisture.**

5 Storage

Instruments must be stored in a sterilized container in a dry and clean environment. If the packaging is opened or damaged, we cannot guarantee the instruments' sterilization status.

ADDRESS

U.S.A 3470 Wilshire Blvd Suite 620 Los Angeles, CA 90010 T +1 213-365-2875

AUSTRALIA 11 / 33 York Street Wynyard Sydney, NSW 2000 T +61 2-9279-1422

CHINA Beijing Office : Room 403, South Tower, No.18 Wangjing North Road, Chaoyang District, Beijing, 100102
T +86 10-6439-8121

Shanghai Office : Room I, 7F, Hechuan Building, 2016 Yishan Road, Minhang District, Shanghai, 201103
T +86 21-6728-5456

MEXICO Rio Danubio 80 Piso 2 y 5 Cuauhtemoc Distrito Federal 06500 T +52 1-55-6394-8061

TAIWAN 9F.-2, No.17, Ln. 91, Sec. 1, Neihu Rd., Neihu Dist., Taipei City 114, Taiwan (R.O.C.)
T +886 2-8752-3319

JAPAN 103 Bloom Omotesando, 5-39-7 Jingumae, Shibuya, Tokyo, Japan T +81 3-6427-6871

IRAN 1&4th Floors, No.231, Citizen Building, Motahari St., Tehran, Iran T +98 21-42893(30Lines)

DIOPars

DIOPars member of DIO Implant

Head Office: 1 & 4 Floors, No.231, Citizen Bldg., Motahari St.,

Postal Code: 1587618415 Tel/Fax: +9821 42893

www.diopars.com

UR(II) System Products Guide ver2_E Designed By mkjung 2016.06

DIO IMPLANT

DIO Implant, 66 Centum Seo-ro, Haeundae-gu, Busan

T +82 51 745 7777 F +82 51 745 7778

www.dioimplant.com www.dionavi.com

CE 0123 KOSDAQ